DOUGLASVILLE CONVENTION CENTER
DOUGLASVILLE, GA
** AUDIO/VIDEO/CONTROL SYSTEMS **

nti
network technologies, inc
www.nticonsultants.com
470 NORTH CLAYTON ST., STE. 205, LAWRENCEVILLE, GA. 30040
TEL (404) 876-6033 FAX (404) 876-6034

DRAWING CATEGORIES

THE TWO LETTER CODE AT THE END OF EACH DESCRIPTION INDICATES THE INTENDED CONTRACTORS USE.
GC–GENERAL CONTRACTOR
EC–ELECTRICAL & MECHANICAL
AV–AV INTEGRATOR
RF–GENERAL REFERENCE FOR ALL

AV0.XX COVER & LEGEND SHEETS – AV SYSTEMS (GC)(RF)
AV1.XX INFRASTRUCTURE SYSTEMS FP– AV SYSTEMS (GC)(EC)(RF)(AV)
AV2.XX INFRASTRUCTURE SYSTEMS RCP– AV SYSTEMS (GC)(EC)(RF)(AV)
AV3.XX EQUIPMENT SYSTEMS FP– AV SYSTEMS (GC)(AV)
AV4.XX EQUIPMENT SYSTEMS RCP– AV SYSTEMS (GC)(AV)
AV5.XX SYSTEMS PROGRAMMING – AV SYSTEMS (AV)
AV8.XX LINE DRAWINGS – AV SYSTEMS (AV)
AV9.XX DETAIL SHEETS – AV SYSTEMS (GC)(RF)

IT IS THE INTENT OF THESE DOCUMENTS THAT POWER, CONDUIT, CABLING, HEATLOAD CONSIDERATIONS, AND JUNCTION BOXES SHOWN ON THESE DRAWINGS TO BE PROVIDED AND INSTALLED BY THE GENERAL CONTRACTOR, AND MECHANICAL & ELECTRICAL SYSTEMS PROVIDER. ALL REMAINING EQUIPMENT AND CABLING IS EXPECTED TO BE PROVIDED BY A QUALIFIED AUDIO/VISUAL CONTRACTOR AS PART OF A SEPERATE AV RFP EFFORT. THE INFORMATION FOR THE AV CONTRACTOR IS INCLUDED HERE FOR REFERENCE ONLY.

PACKAGE INCLUSIONS

1) A COMPETE SET AV INFRASTRUCTURE DRAWINGS AND EQUIPMENT PLACEMENT REFERENCE DRAWINGS.
2) CONDUIT PATHWAYS AND CABLE REQUIREMENTS ARE INCLUDED ON THE AV–1.XX AND AV–2.XX SERIES OF DRAWINGS. SEE SPECIAL SYSTEMS NOTES FOR ADDITIONAL REQUIREMENTS.
3) ADDITIONAL REQUIREMENTS FOR THE SYSTEM AS PROVIDED BY OTHERS.

DRAWING INDEX

AV–0–00 COVER SHEET – AV SYSTEMS
AV–0–01 SYMBOL & LEGEND SHEET – AV SYSTEMS
AV–1–01 MAIN LEVEL CONFERENCE CENTER INFRASTRUCTURE FLOOR
AV–2–01 MAIN LEVEL CONFERENCE CENTER INFRASTRUCTURE RCP
AV–3–01 MAIN LEVEL CONFERENCE CENTER EQUIPMENT FLOOR
AV–4–01 MAIN LEVEL CONFERENCE CENTER EQUIPMENT RCP
AV–5–01 PROGRAMMING SHEET A – AV SYSTEMS
AV–5–02 PROGRAMMING SHEET B – AV SYSTEMS
AV–8–01 CONNECTION SHEET A – AV SYSTEMS
AV–8–02 CONNECTION SHEET B – AV SYSTEMS
AV–8–03 CONNECTION SHEET C – AV SYSTEMS
AV–8–04 CONNECTION SHEET D – AV SYSTEMS
AV–8–05 CONNECTION SHEET E – AV SYSTEMS
AV–9–01 DETAIL SHEET A – AV SYSTEMS
AV–9–02 DETAIL SHEET A – AV SYSTEMS

SCOPE

PROJECT: NEW CONSTRUCTION EFFORT TO CREATE AN IACC STANDARDS CONVENTION CENTER FACILITY. TECHNOLOGY AND SYSTEMS TO REFLECT CURRENT REQUIREMENTS AS WELL AS TRENDS IN TODAY'S NEW TECHNOLOGY WHERE APPROPRIATE.

AUDIO: BACKGROUND MUSIC SYSTEMS IN PUBLIC CIRCULATION AREAS. MUSIC AND SPEECH REINFORCEMENT SYSTEMS WITHIN THE MEETING AND BALLROOM SPACES.

VIDEO: BUILT IN VIDEO DISPLAYS IN THE LARGER MEETING SPACES CONSISTING OF A BUILT IN PROJECTOR WITH SCREEN SYSTEM IN THOSE SPACES.

CONTROL: CONTROL WILL BE USER FRIENDLY AND EFFICIENT. EFFORTS TO COORDINATE CONTROL OF THE AV AND LIGHTING SYSTEMS ARE BEING LOOKED AT. CONTROL OF THE HVAC THERMOSTATS IS ALSO BEING CONSIDERED.

SPECIAL SYSTEMS NOTES:

1) COORDINATE WITH FIRE SYSTEMS PROVIDER, TO RECEIVE AN OPEN/CLOSED FEED FROM THEIR SYSTEM. THIS FEED WILL TRIGGER AN "ALL MUTE" TO THE AUDIO SYSTEMS IN CASE OF AN EMERGENCY. A 2 CONDUCTOR CONTROL WIRE WILL NEED TO BE RUN FROM THE FIRE SYSTEMS CONTROLLER TO THE CENTRAL AV RACK LOCATION. COORDINATE FINAL CABLE TYPE WITH FIRE SYSTEMS PROVIDER.
2) AT SOME RACK LOCATIONS THERE ARE TWO DATA DROPS INDICATED. ONE DROP IS RECOMMENDED TO BE CONNECTED TO THE ADMINISTRATIVE NETWORK. THE SECOND DROP IS TO BE COORDINATED WITH THE HIGH SPEED INTERNET SERVICE PROVIDER FOR A OUTSIDE ACCESS IP ADDRESS FOR USE WITH THE BACKGROUND MUSIC SYSTEMS. IF ONLY ONE DATA DROP IS INDICATED THEN THE ADMINISTRATIVE NETWORK IS THE DEFAULT CONNECTION.
3) EQUIPMENT AND CABLING INDICATED ON THE AV–1.XX AND AV–2.XX SERIES IS INTENDED TO BE INSTALLED DURING CONSTRUCTION. ALL CABLE PULLING, LABELING, AND TESTING REQUIREMENTS APPLY. FULL DOCUMENTATION OF ALL CABLES AND EQUIPMENT INSTALLED DURING CONSTRUCTION SHALL BE MADE AND DELIVERED AS PART OF AN AS–BUILT DOCUMENTATION.

GENERAL NOTES

1) THESE DRAWINGS ARE NOT TO BE USED FOR ARCHITECTURAL OR ENGINEERING PURPOSES. THE TECHNOLOGY INFORMATION CONTAINED WITHIN IS FOR COORDINATION AND INFORMATIONAL PURPOSES ONLY.
2) ALL DEVICES RELATED TO THE AV TECHNOLOGY SHALL BE MOUNTED AND INSTALLED AS PER THE MANUFACTURES RECOMMENDATIONS. THEY SHALL BE PLUM TO THE WALLS, FLOORS, OR RELATED MOUNTING EQUIPMENT WHEN EVER APPLICABLE.
3) WHILE THESE DRAWINGS CALL OUT FOR THE MAIN COMPONENTS REQUIRED FOR THE FULL OPERATION AND PERFORMANCE OF THIS SYSTEM DESIGN, ALL DEVICES SUPPLEMENTAL AND RELATED TO THE PERFORMANCE, OPERATIONS, AND INSTALLATION OF THESE DEVICES ARE NOT EXCLUDED AND SHOULD BE CONSIDERED TO BE A PART OF THE SCOPE OF WORK.
4) ALL WORK SHALL CONFORM TO THE NATIONAL ELECTRICAL CODE (NEC) AND TO THE NATIONAL FIRE PROTECTION ASSOCIATION (NFPA). WHERE REQUIRED BY LOCAL CODE FOR MAINTAINING FIRE RATING, USE FIRESTOP TO ALL STUB THROUGH LOCATIONS.
5) WHERE APPLICABLE ALL EQUIPMENT AND MATERIALS SHALL BE AS APPROVED BY – NATIONAL ELECTRICAL MANUFACTURERS ASSOCIATION (NEMA), UNDERWRITERS LABORATORIES, INC. (UL) OR SIMILARLY RELATED ASSOCIATION.
6) ALL WORK SHALL COMPLY WITH, MEET, OR EXCEED STANDARDS SET ASIDE BY – NATIONAL ELECTRICAL CODE (NEC)/ AMERICAN NATIONAL STANDARDS INSTITUTE (ANSI)/ INFOCOMM INTERNATIONAL/ INSTITUTE OF ELECTRONIC & ELECTRICAL ENGINEERS (IEEE)/ AMERICANS WITH DISABILITIES ACT (ADA)/ AND ANY APPLICABLE ASSOCIATIONS.
7) CONTRACTOR IS RESPONSIBLE FOR FIRESTOPPING ALL WALL AND FLOOR PENETRATIONS PER LOCAL CODES.
8) MATERIALS REQUIRED TO MEET THE STANDARDS OF THE ABOVE STATED ASSOCIATIONS SHOULD BE INCLUDED AS PART OF THIS SCOPE OF WORK.
9) EXCEPT WERE SPECIFICALLY SHOWN OR DESCRIBED ALL EQUIPMENT REPRESENTATION IS FOR GENERAL INFORMATION OF CONNECTIVITY, PLACEMENT, AND RELATIONSHIP WITHIN THE DESIGNED SYSTEM.
10) THE DIMENSIONS SHOWN ARE SUGGESTED PLACEMENTS ONLY FOR COORDINATION AND INFORMATION. FINAL LOCATIONS WILL NEED TO BE PLACED BASED ON ACTUAL FIELD CONDITIONS AND VERIFIED WITH ARCHITECT/I.D. PRIOR TO INSTALLATION. FIELD CONDITIONS TAKE PRECEDENCE OVER ANY DRAWING DIMENSIONS.
11) ALL CEILING SPEAKER LOCATIONS ARE REFERENCE LOCATIONS ONLY. THEY ARE INTENDED FOR THE INSTALLATION BY THE GC.
12) FINAL MOUNTING LOCATIONS FOR CEILING MOUNTED EQUIPMENT SHALL BE COORDINATED WITH THE RCP DRAWING.

PROJECT REQUIREMENTS

1) THE EQUIPMENT LISTED HAS BEEN APPROVED FOR USE IN THIS PROJECT. ANY SUBSTITUTIONS FOR THE EQUIPMENT LISTED SHALL BE SUBMITTED IN WRITING AND APPROVAL GIVEN BEFORE ITEM WILL BE USED AS PART OF THE DESIGN. ALL REQUEST FOR INFORMATION (RFI) WILL BE SUBMITTED IN WRITING THROUGH THE PRIMARY CONTRACTOR AND WILL BE ANSWERED THROUGH THE SAME PARTY.
2) EQUIPMENT SHOULD BE ORDERED RELATIVE TO THE INSTALLATION DATES TO ENSURE THAT THE CUSTOMER RECEIVES THEIR MAXIMUM WARRANTY COVERAGE AND TO PREVENT ADDITIONAL CHARGES FOR STORAGE.
3) IF A SIGNIFICANT AMOUNT OF TIME HAS PAST BETWEEN PROPOSAL ACCEPTANCE AND EQUIPMENT ORDERING, THE CONTRACTOR SHALL REVIEW ALL EQUIPMENT FOR PRICE DECREASES, DISCONTINUED EQUIPMENT, OR OTHER ITEMS THAT MIGHT AFFECT THE FINAL EQUIPMENT PURCHASED. A LIST OF ALL CHANGES SHALL BE SUBMITTED TO THE OWNER AND CONSULTANT FOR REVIEW PRIOR TO ORDERING EQUIPMENT.
4) ALL EQUIPMENT SHALL BE PROVIDED BY AN AUTHORIZED DEALER OF THE EQUIPMENT WITH FULL WARRANTY AND SERVICE GUARANTEES APPLICABLE.
5) EQUIPMENT INSTALLER SHALL HAVE ALL CERTIFICATIONS PERTAINING TO PROGRAMMING, INSTALLATION, AND OPERATION OF THE EQUIPMENT PER THE EQUIPMENT MANUFACTURES RECOMMENDATION.
6) EQUIPMENT PROVIDER SHALL BE ABLE TO PROVIDE RESPONSE TIME WITHIN ONE BUSINESS DAY FOR ANY ISSUES RELATING TO THE INSTALLATION, SERVICE, PERFORMANCE, OR MALFUNCTION WITH THE INSTALLED SYSTEM.
7) ALL COST ASSOCIATED WITH THE PREPARATION OF THIS PROPOSAL WILL BE THE RESPONSIBILITY OF THE PROPOSING INTEGRATOR
8) INSTALLATION PROCEDURES SHALL FOLLOW BEST PRACTICE STANDARDS SET ASIDE BY INFOCOMM INTERNATIONAL, NSCA, BISCI, NEC, ISO/IEC OR OTHER RELATED ORGANIZATIONS THAT PERTAIN TO THE INSTALLED SYSTEMS. ANY RELATED STANDARDS INCLUDING LOCAL CODES AND REGULATIONS ARE THE RESPONSIBILITY OF THE AV INTEGRATOR, TO DISCOVER AND FOLLOW AS RELATED TO THIS PROJECT.
9) ALL TERMS OF THE CONTRACT SHALL BE DETERMINED BY THE G.C. AND THE PROJECT TEAM. NO OTHER AGREEMENTS SHALL BE FOLLOWED AS PART OF THIS PACKAGE.
10) ALL EQUIPMENT TYPES, EQUIPMENT COUNTS, CONNECTIVITY AND SPECIFICATIONS ARE CONTAINED WITHIN THIS PACKAGE. IT IS THE RESPONSIBILITY OF THE EQUIPMENT PROVIDER AND INTEGRATOR TO VERIFY ALL COUNTS, CONNECTIVITY, AND FUNCTIONALITY. ANY QUESTIONS RELATED TO THIS DESIGN PACKAGE SHALL BE DIRECTED THROUGH THE PRIMARY CONTRACTOR.
11) AV CONTRACTOR SHALL ABIDE BY ALL RULES AND REGULATIONS SET ASIDE BY THE OWNERSHIP FOR SAFETY, INSURANCE, BONDING, SITE REGULATIONS AND OTHER RELATED POLICIES REGARDING THIS PROJECT.
12) THE INTEGRATION TEAM SHALL MAINTAIN A CLEAN WORK AREA AT ALL TIMES. THIS INCLUDES BUT IT NOT LIMITED TO, SWEEPING UP, THE REMOVAL OF ALL TRASH ITEMS, NEAT STORAGE OF EQUIPMENT, TOOLS, BOXES, WIRES, AND ANY RELATED MATERIALS.
13) A CLEAN PROFESSIONAL APPEARANCE AND WORK ATMOSPHERE IS ALSO EXPECTED. CLOTHING SHALL INDICATE THE COMPANY THE INSTALLER IS WITH. CONVERSATIONS SHALL BE DONE WITH RESPECT TO THE WORK ENVIRONMENT AND THOSE AROUND THE FACILITY.
14) ARRANGEMENTS FOR ON–SITE STORAGE OF EQUIPMENT, TOOLS, OR OTHER RELATED MATERIALS SHOULD BE COORDINATED WITH THE GC OR APPROPRIATE ON–SITE GROUP RESPONSIBLE FOR THE SITE.

JUNCTION BOX & CONDUIT NOTES

1) ALL CONDUIT IS TO BE ¾" UNLESS OTHERWISE NOTED.
2) ONE JUNCTION PULL BOX APPROX. EVERY 100' OF STRAIGHT CONDUIT RUNS. ALSO LOCATE ONE JUNCTION PULL BOX FOR EVERY TWO NINETY DEGREE BENDS OR SIMILAR ANGLES. ACCESS TO THE PULL BOX LOCATIONS SHOULD BE COORDINATED WITH THE DESIGN TEAM.
3) THE JUNCTION BOX LOCATIONS ARE GIVEN FOR COORDINATION PURPOSES ONLY. THE PATHWAY OF THE RELATED CONDUIT WILL BE DETERMINED BY THE MEP FIRM AND FIELD CONDITIONS.
4) EACH JUNCTION BOX SHALL HAVE A PULL STRING PROVIDED FOR FUTURE CABLE INSTALLATIONS. ALL CABLE INSTALLATIONS WILL INCLUDE A REPLACEMENT PULL STRING. ALL CONDUIT RUNS SHALL BE LABELED ON BOTH ENDS.
5) ALL CONDUIT PATHWAYS TO BE STUBBED TO ACCESSIBLE CEILING AREA CONTIGUOUS TO CABLE DESTINATION ROOM. TO PROVIDE FULLY ACCESSIBLE CABLE PATHWAY.

ELECTRICAL AND MECHANICAL NOTES

1) ANY ELECTRICAL DEVICE LOCATIONS ARE MEANT FOR THE INCORPORATION INTO THE PROJECT ELECTRICAL DRAWINGS FOR INCLUSION INTO THE ELECTRICAL SYSTEMS.
2) POWER RECEPTACLES ARE SHOWN FOR REFERENCE ONLY. THEY ARE SHOWN FOR THE INCORPORATION BY THE ELECTRICAL ENGINEER INTO THEIR STAMPED DRAWINGS.
3) DO NOT RUN ELECTRICAL FEEDS PARALLEL TO ANY AUDIO/ VIDEO/ OR CONTROL CABLE WHEN EVER POSSIBLE. ALL CABLE CROSSING SHOULD BE DONE AT A NINETY DEGREE ANGLE. A MINIMUM OF FOUR FEET OF SEPARATION SHOULD BE MAINTAINED FOR ANY PARALLEL RUNS.
4) DETAILS RELATED TO ELECTRICAL REQUIREMENTS AND HEAT LOADS ARE PROVIDED FOR IN THE DETAILS SECTION OF THE DRAWINGS. OUTLET LOCATIONS ARE CALLED OUT FOR ON BOTH THE DRAWINGS AND THE DETAIL SECTIONS.
5) CABLE TRAYS ARE EXPECTED TO BE IN THE DOMAIN OF THE ELECTRICAL CONTRACTOR AND THE GC. J–HOOKS AND RELATED SUPPORT FOR OTHER CABLING NEEDS SHALL BE PROVIDED BY THE AV INTEGRATOR UNLESS STRUCTURAL REQUIREMENTS DICTATE OTHERWISE.

CONTRACTOR NOTES

1) CONTRACTOR SHALL HAVE A MINIMUM OF 5 YEARS OF EXPERIENCE WITH SIMILAR SCOPE, SCALE, AND COMPLEXITY OF THE TECHNOLOGY PRESENTED HEREIN.
2) CONTRACTOR SHALL BE A CURRENT MEMBER IN GOOD STANDING OF INFOCOMM INTERNATIONAL, NATIONAL ASSOCIATION OF BROADCASTERS, NATIONAL SYSTEMS CONTRACTORS ASSOCIATION, OR RELATED AUDIO VISUAL ASSOCIATION.
3) CONTRACTOR SHALL BE A FULLY AUTHORIZED DIRECT DEALER OF ANY AND ALL MAJOR COMPONENTS LISTED HEREIN.
4) CONTRACTOR SHALL HOLD CURRENT AND COMPLETE CERTIFICATIONS FOR PROGRAMMING, INSTALLATION, SET–UP & CONFIGURATION OF ALL MAJOR COMPONENTS WHERE APPLICABLE FOR THE EQUIPMENT LISTED HEREIN.
5) IT IS THE RESPONSIBILITY OF THE CONTRACTOR TO VERIFY ALL FIELD CONDITIONS AND REPORT ANY DISCREPANCIES FOUND PRIOR TO STARTING ANY WORK.
6) IT IS THE RESPONSIBILITY OF THE CONTRACTOR TO REVIEW ALL RELATED DOCUMENTS AND DRAWINGS OF OTHER DISCIPLINES THAT MIGHT PERTAIN TO FINAL SYSTEM REQUIREMENTS. THESE INCLUDE POWER, FACILITY COVER PLATE COLORS, FINAL INSTALLED CEILING LOCATIONS AND OTHER REQUIREMENTS.
7) INCLUDED WITH A PROPOSAL RESPONSE TO A RFP SHALL BE DOCUMENTATION FOR VERIFICATION OF THE ABOVE LISTED REQUIREMENTS, A LIST OF ALL PERTINENT PERSONNEL THAT WILL BE ASSIGNED TO THE PROJECT ALONG WITH THEIR QUALIFICATIONS, A GENERAL EQUIPMENT LIST, AND ANY EXTENDED SERVICE WARRANTIES OR CONTRACTS AVAILABLE FROM THE BIDDING FIRM.
8) PERTINENT PERSONNEL ASSIGNED TO THIS PROJECT THAT HOLD CERTIFICATES SUCH AS CTS–I, CTS–D, CTS, CERTIFIED PROGRAMMER, NSCA CERTIFIED ELECTRONICS SYSTEMS TECHNICIAN, NICET LVL I OR II WILL BE MORE HEAVILY FAVORED IN FINAL REVIEW OF QUALIFICATIONS FOR THIS PROJECT.
9) ANY SUBCONTRACTOR SHALL BE LISTED AS TO PRIMARY CONTACT, LEAD ON–SITE PERSONNEL, AND AREA OF RESPONSIBILITY AS IT RELATES TO THE JOB. ALL SUBCONTRACTORS AND THEIR WORK ARE REQUIRED TO MEET THE SAME QUALIFICATIONS AS THE PRIMARY CONTRACTOR FOR THEIR AREA OF RESPONSIBILITY.
10) TWO SETS OF SHOP DRAWINGS SHALL BE SUBMITTED PRIOR TO WORK STARTING TO CONVEY THE UNDERSTANDING OF THE DESIGN AND THE EXPECTATION OF THE CONTRACTOR AS IT RELATES TO THEIR SCOPE. INCLUDED WITH THE SHOP DRAWINGS SHALL BE;
A) A COMPLETE SET OF DRAWINGS SHOWING THE SPECIFIC CONFIGURATION AND CONNECTIVITY OF THE SYSTEMS REPRESENTED IN THIS SCOPE OF WORK.
B) DRAWINGS SHALL BE SUBMITTED EITHER ELECTRONICALLY USING DWG/PDF/ OR SIMILAR INDUSTRY STANDARD, OR HARD COPY ON DRAWING SHEETS MATCHING THE PROJECT STANDARD SIZE.
C) WIRING, RACK PLACEMENT, CONNECTIVITY, WALL & FLOOR PENETRATIONS, BLOCK DIAGRAMS, AND SIMILARLY RELATED INFORMATION SHALL BE CONVEYED WITH IN THE SHOP DRAWINGS SUBMITTED.
D) ANY CONTROL SYSTEM INTERFACE UNITS SHALL HAVE A GUI OR ENGRAVING INTERFACE DEVELOPED BY THE INSTALLING CONTRACTOR AND WILL BE SUBMITTED FOR REVIEW & COMMENT BY THE DESIGN TEAM AND OWNERSHIP BEFORE FINAL SYSTEM WILL BE ACCEPTED.
E) ANY EQUIPMENT SUCH AS SPEAKERS, PROJECTORS, LIFTS, OR SIMILAR PRODUCTS THAT REQUIRE SPECIAL INFORMATION FOR INSTALLATION SHALL BE DETAILED FOR INSTALLATION REFERENCE.
11) TESTING SHALL BE DONE BASED ON BEST PRACTICES RECOMMENDATIONS WITH PERTINENT TESTING. A COMPLETE LIST OF THE TEST EXPECTED TO BE DONE SHALL BE INCLUDED WITH THE PROPOSAL. A FINAL REPORT OF THE TEST RESULTS SHALL BE INCLUDED AS A PART OF THE FINAL CLOSE–OUT PACKAGE.
12) A FINAL CLOSEOUT PACKAGE SHALL BE PROVIDED UPON COMPLETION OF THE PROJECT. THIS PACKAGE SHALL INCLUDE THE SET OF AS–BUILT DRAWINGS, A CONNECTIVITY SHEET (LAMENATED) AND PLACED WITH THE EQUIPMENT RACK, ALL PROGRAMS USED TO PROGRAM THE SYSTEM WITH THE VERSIONS USED FOR PROGRAMMING AS WELL AS A USABLE COPY OF THE FINAL PROGRAMMING DONE FOR EACH PIECE OF PROGRAMMABLE EQUIPMENT. A LIST OF FINAL SETTING SHALL ALSO BE PROVIDED FOR REFERENCE. A COPY OF ALL RELATED MANUALS AND WARRANTIES SHALL ALSO BE PROVIDED. THIS INFORMATION SHALL BE PLACED IN A THREE(3) RING BINDER AND TWO COPIES SHALL BE PROVIDED TO THE OWNER.
13) ALSO INCLUDED WITH THE FINAL CLOSEOUT PACKAGE SHOULD BE A BASIC OPERATIONAL LAMINATE THAT PROVIDES A QUICK REFERENCE TO BASIC SYSTEMS OPERATIONS. THIS SHOULD BE PLACED WITH THE CONNECTIVITY SHEET LAMINATE AT THE EQUIPMENT RACK LOCATION.
14) AS–BUILT DRAWINGS ARE REQUIRED FOR THIS INSTALLATION. ALL AS–BUILT DRAWINGS SHALL INDICATE EQUIPMENT, CONNECTIVITY, LABELING, AND RELATED INFORMATION.
15) UPON COMPLETION OF THE PROJECT AND A FINAL INSPECTION BY THE CONSULTANT, A FINAL TRAINING SHALL BE ARRANGED BY THE PRIMARY CONTRACTOR TO OFFER COMPLETE TRAINING ON ALL REQUIRED SYSTEMS.
16) ALL CURRENT NETWORK & AUDIO VIDEO PROTOCOLS, STANDARDS, AND GUIDELINES SHALL BE FOLLOWED WHEN MAKING CONNECTIONS, PROGRAMMING, AND LABELING THE SYSTEMS.

CABLING NOTES

1) THE CONTRACTOR INSTALLING THE CABLING INFRASTRUCTURE IS RESPONSIBLE FOR ALL J–HOOKS, CABLE TRAYS, AND RELATED MATERIALS REQUIRED TO COMPLETE THE CABLE PATHWAY TO THE HOMERUN LOCATION.
2) CONDUIT FILL SIZE SHALL FOLLOW THE NEC GUIDELINES FOR FILL CAPACITY.
3) SEE LABELING NOTES FOR LABELING INSTRUCTIONS.

CABLE PULLING

1) MAINTAIN MINIMUM BEND RADIUS ON ALL CABLE TYPES. THIS RADIUS IS GENERALLY 4 TIMES THE CABLE O.D. FOR COPPER CABLE TYPES.
2) THE MAXIMUM DISTANCE BETWEEN THE END BOX LOCATION AND THE HOMERUN LOCATION IS 225 FEET.
3) DO NOT EXCEED 25LBS OF PULLING TENSION ON CABLES.
4) MINIMIZE TENSION ON SUSPENDED CABLE RUNS BY PLACING SUPPORTS EVERY 5 FEET WHEN J–HOOKS OR SIMILAR DEVISES ARE BEING USED FOR CABLE SUPPORT.
5) DO NOT OVERSINCH CABLE TIES ON CABLE BUNDLES. CABLES TIES SHOULD BE LOOSELY FITTED OVER THE CABLES AS TO NOT CAUSE INDENTION IN THE CABLE JACKET.
6) PLENUM RATED CABLE TIES MUST BE USED IN ALL RETURN AIR PLENUM SPACES.
7) LEAVE 6 FOOT SERVICE LOOPS OF AT ALL SPEAKER LOCATION.
8) LEAVE 3 FOOT SERVICE LOOPS AT ALL FACEPLATE LOCATIONS.
9) LEAVE 10 FOOT SERVICE LOOPS AT ALL RACK LOCATIONS.
10) AVOID SOURCES OF EMI ON UNSHIELDED CABLES BY MAINTAINING THE FOLLOWING MINIMUM SEPARATION DISTANCES BETWEEN CABLING PATHWAYS AND POTENTIAL SOURCES:
A) 4 FEET FROM MOTORS OR TRANSFORMERS
B) 1 FOOT FROM CONDUIT OR CABLES USED IN ELECTRICAL DISTRIBUTION.
C) 6 INCHES FROM FLUORESCENT LIGHTING.

CABLE PATHWAYS SHOULD CROSS PERPENDICULAR TO FLUORESCENT LIGHTING AND ELECTRICAL POWER CABLES OR CONDUITS.

11) INSTALLER SHALL DEVELOP AND SUBMIT FOR APPROVAL, A PERMANENT LABELING SYSTEM FOR THE CABLING INFRASTRUCTURE INSTALLATION.

LABELING NOTES

1) ALL CABLES AND EQUIPMENT SHOULD BE EASILY IDENTIFIABLE.
2) CABLES SHOULD BE LABELED USING A THERMAL TRANSFER LABELING DEVICE FOR EASY READING AND DURABILITY. THE LABEL SHOULD BE COVERED WITH CLEAR HEAT SHRINK OR SIMILAR PROTECTIVE COVERING TO HELP PROTECT THE LABEL. THE LABEL SHOULD BE PLACED BETWEEN 4" AND 6" FROM THE CONNECTION OR TERMINATION POINT.
3) CABLES SHOULD BE LABELED WITH A LETTER PREFIX FIRST WHICH INDICATED THE CABLE TYPE, FOLLOWED BY AN IDENTIFICATION NUMBER. EX. S–012 = (S)PEAKER #12
S=SPEAKER LEVEL
L=LINE LEVEL
M=MIC LEVEL
V=VIDEO
C=CONTROL
OTHER INDICATORS MAY BE REQUIRED BASED ON THE CABLE TYPES.
4) ALL LABELS SHALL MATCH DESIGNATIONS SHOWN ON THE CONNECTION DIAGRAM, THE AS–BUILT DRAWINGS, THE QUICK REFERENCE CHART, AND ANY PROGRAMMED SYSTEMS.

INSTALLATION NOTES

1) IT IS RECOMMENDED THAT THE FINAL HEAD–END EQUIPMENT NOT BE INSTALLED UNTIL A MAJORITY OF THE MAJOR CONSTRUCTION IS COMPLETE. THIS WILL LIMIT POTENTIAL DAMAGE FROM CONSTRUCTION WORK, DUST, AND RELATED RISKS.
2) UPON INSTALLATION OF THE CEILING SPEAKERS, THE PAINT GUARD SHALL BE PUT IN PLACE AND SHALL REMAIN THERE UNTIL SUCH TIME AS THE FACILITY HAS BEEN PAINTED AND IT IS TIME FOR FINAL SETUP AND CONFIGURATION.
3) A PANEL CRAFTERS PLATE (QUOTE #NETTE–25472–RHM–02 SHALL BE ORDERED AND PLACED IN EACH RACK. THIS PLATE HAS ADDITIONAL ROOM FOR THE INTEGRATORS CONTACT INFORMATION IF IT IS SO DESIRED TO INCLUDE IT ON THIS PLATE. IF THE CONTRACTOR DOES NOT WISH TO ADD THEIR INFORMATION TO THIS PLATE A SEPARATE CONTACT INFORMATION PLATE SHOULD BE INCLUDED IN EACH RACK.
4) THE COPY OF THE SOFTWARE THAT IS TO BE INCLUDED IN THE CLOSEOUT PACKAGE SHOULD BE ON CD–R/CD–RW/DVD–R OR SIMILAR STORAGE SYSTEM. THE VERSIONS OF SOFTWARE SHOULD ALSO BE LISTED SEPARATELY FOR FUTURE REFERENCE INCASE OF DAMAGE TO THE STORAGE DEVICE. IF THE INTEGRATOR HAS RESTRICTIONS ABOUT PROVIDING AN EDITABLE COPY OF THEIR PROGRAMMING, IT SHOULD BE MADE KNOWN UP FRONT WITH A LISTING OF THEIR RESTRICTIONS OR USE CRITERIA.

GENERAL TESTING REQUIREMENTS

1) VERIFY ALL CABLE IS DEFECT FREE, WITH NO SHORTS AND/OR OPENS PRIOR TO CONNECTION TO ANY HEAD END OR FIELD DEVICES. USE AN OHM METER TO VERIFY THIS.
2) VERIFY THAT ALL IMPEDANCE SWEEPS MATCH THE MANUFACTURES SPECIFICATIONS AND INTENDED DESIGN LEVELS.
3) VERIFY THAT THE POLARITY OF ALL MICROPHONE INPUTS, LINE LEVEL INPUTS AND SPEAKER CABLES IS CORRECT.
4) CONFIGURE ALL GAIN LEVELS, AND SIGNALS FOR OPTIMAL HEADROOM AND STRUCTURE. ALL SIGNALS SHOULD PEAK SIMULTANEOUSLY FOR OPTIMAL PERFORMANCE.
5) OUTPUT LEVELS ON ALL AMPLIFIERS SHOULD BE BALANCED TO MEET PERFORMANCE REQUIREMENTS OF THE SPACE AND TO KEEP NOISE LEVELS AT A MINIMUM.
6) ENSURE THAT THE VIDEO IMAGERY IS FREE FROM DEFECTS SUCH AS HUMBARS, BLOOMING, GHOSTING, OR RELATED DEGRADATION OF SIGNAL QUALITY.
7) VERIFY THAT ALL CABLES, CONNECTIONS, PATCHES, HEAD–END, FIELD, AND MISCELLANEOUS EQUIPMENT IS CONNECTED PROPERLY AND IN GOOD WORKING CONDITION.
8) TEST ALL OUTLETS PERTAINING THE THE AV SYSTEMS FOR CORRECT POLARITY AND VOLTAGE LEVELS. REPORT ANY DISCREPANCY TO THE ELECTRICAL CONTRACTOR.
9) PROVIDE DOCUMENTATION OF ALL TEST PERFORMED AND THE RESULTS. THIS SHALL INCLUDE POLARITY AND CONTINUITY TESTS, IMPEDANCE SWEEPS OF INSTALLED SPEAKERS, AND OUTLET TEST RESULTS.
10) PROVIDE DOCUMENTATION OF ALL FINAL GAIN AND LEVEL SETTINGS OF ALL HEAD–END EQUIPMENT AS WELL AS ANY CORRESPONDING SETTINGS OF FIELD EQUIPMENT THAT HAS ADJUSTABLE LEVELS.

SYSTEMS TRAINING REQUIREMENTS

1) UPON COMPLETION OF THE SYSTEMS INSTALLATION, CONFIGURATION, AND TEST, A TRAINING EFFORT SHALL BE SET UP FOR KEY PERSONNEL THAT INTERFACE WITH THE TECHNOLOGY.
2) A PLAN SHOULD BE SUBMITTED TO THE OWNER/OWNER REPRESENTATIVE, CONSULTANT, AND DESIGN TEAM THAT REPRESENTS THE TOPICS THAT WILL BE COVERED.
3) THE TRAINING SHALL INCLUDE BASIC OPERATION, SYSTEMS CAPABILITIES, WORKING WITH INTERFACES, AND VERY BASIC TROUBLE SHOOTING CONCEPT.
4) THIS IS TYPICALLY ONLY ONE TRAINING CLASS. THIS SHOULD BE VERIFIED WITH OWNERSHIP. ALL ARRANGEMENTS SHOULD BE HANDLED WITH OWNERSHIP AND INTEGRATOR.

SYSTEMS WARRANTY

1) FULL WARRANTY FOR ALL EQUIPMENT SHALL BEGIN UPON THE SIGN OFF OF COMPLETION. A MINIMUM OF ONE YEAR ON–SITE SERVICE SHALL BE PROVIDED ON ALL INSTALLATION AND INSTALLATION RELATED MATERIALS. THE MANUFACTURES WARRANTY SHALL BE FULLY SUPPORTED ON–SITE DURING THAT FIRST YEAR.
2) AN OPTIONAL ADDITIONAL SERVICE AND WARRANTY PLAN SHOULD BE SUBMITTED FOR ADDITIONAL SUPPORT BEYOND THE ONE YEAR SUPPORT INDICATED ABOVE.
3) ALL WARRANTY SUPPORT WILL BE DONE DIRECTLY BY THE SUBMITTER OF THIS PROPOSAL. FULL CONTACT INFORMATION INCLUDING EMAIL, PHONE, NAME, AND RELATED INFORMATION SHALL BE PROVIDED AS PART OF THE CLOSE–OUT DOCUMENTATION.
4) ALL WARRANTY WORK SHALL BE DONE BY FACTORY AUTHORIZED FIRMS OR IN ACCORDANCE WITH THE MANUFACTURES ESTABLISHED METHODS OF WARRANTY SUPPORT.
5) ANY PRODUCT THAT IS BEING PURCHASED THROUGH A SECOND PARTY AND THEREFORE RISKING THE LOSS OF WARRANTY SUPPORT SHOULD BE NOTED IN FULL IN THE PROPOSAL DOCUMENTATION FOR FURTHER CONSIDERATIONS.

nti
network technologies, inc
www.nticonsultants.com
470 NORTH CLAYTON ST., STE. 205, LAWRENCEVILLE, GA. 30040
TEL (404) 876-6033 FAX (404) 876-6034
BICSI MEMBER
Member infoComm INTERNATIONAL

THIS DRAWING IS AN INSTRUMENT OF SERVICE AND, AS SUCH, IS THE PROPERTY OF NETWORK TECHNOLOGIES, INC. (NTI). IT IS TO BE USED ONLY FOR THE PROJECT AND SITE SPECIFICALLY IDENTIFIED HEREIN. NO PART OF THIS DOCUMENT SHALL BE REPRODUCED OR TRANSMITTED IN ANY FORM OR BY ANY MEANS, ELECTRONIC OR MECHANICAL, FOR ANY PURPOSES WITHOUT THE EXPRESS WRITTEN PERMISSION OF NETWORK TECHNOLOGIES, INC.
NTI JOB NO. 09–7545

Rabun Rasche Rector Reece
ARCHITECTS
44 Broad Street NW, Suite 300
Atlanta, Georgia 30303
P 404-522-9455 F 404-522-9454

This drawing is the property of Rabun Rasche Rector Reece Architects and is not to be reproduced or copied in whole or in part. It is to be used for the Project and Site specifically identified herein and is not to be used on any other project. It is to be returned upon request. Scale as stated hereon are valid on the original drawing, the size of which is 30 inches high by 42 inches long.

DOUGLASVILLE
CONFERENCE CENTER
DOUGLASVILLE, GEORGIA

REVIS.	DATE	REMARKS
	03/09/10	FIRE MARSHAL
	05/14/10	PERMIT SET
	07/16/10	BID SET

SHEET TITLE
COVER SHEET
AV SYSTEMS

PROJECT NUMBER 722
DATE 03/09/10
SHEET NUMBER AV-0-00

RELEASED FOR CONSTRUCTION

SYMBOL & LEGEND LIST

ELECTRICAL SYMBOLS AND NOTES

SYMBOL	DESCRIPTION	MOUNT TYPE & SIZE	MOUNT HEIGHT	CONDUIT REQUIREMENTS	NOTES
	120V 20AMP DEDICATED CIRCUIT WITH DUPLEX OUTLET*	SEE ELECTRICAL DRAWINGS FOR JUNCTION BOX SIZE	SOH	REFER TO ELECTRICAL DRAWINGS FOR CONDUIT REQUIREMENTS	
	120V 20AMP DEDICATED CIRCUIT WITH DUPLEX OUTLET*	SEE ELECTRICAL DRAWINGS FOR JUNCTION BOX SIZE	12" AFC	REFER TO ELECTRICAL DRAWINGS FOR CONDUIT REQUIREMENTS	
	120V 20AMP DEDICATED CIRCUIT WITH DUPLEX OUTLET*	SEE AV DRAWINGS FOR BOX TYPES AND LOCATIONS	MOUNTED IN JUNCTION BOX	REFER TO ELECTRICAL DRAWINGS FOR CONDUIT REQUIREMENTS	
	120V 20AMP DEDICATED CIRCUIT UNTERMINATED*	SEE ELECTRICAL DRAWINGS FOR JUNCTION BOX SIZE	12" AFC	REFER TO ELECTRICAL DRAWINGS FOR CONDUIT REQUIREMENTS	
	120V 20AMP DEDICATED CIRCUIT WITH QUAD OUTLET*	SEE ELECTRICAL DRAWINGS FOR JUNCTION BOX SIZE		REFER TO ELECTRICAL DRAWINGS FOR CONDUIT REQUIREMENTS	
	FOUR (4) 120V 20AMP DEDICATED CIRCUIT WITH QUAD OUTLET*	SEE ELECTRICAL DRAWINGS FOR JUNCTION BOX SIZE	SOH	REFER TO ELECTRICAL DRAWINGS FOR CONDUIT REQUIREMENTS	
	120V 20AMP DEDICATED CIRCUIT WITH SINGE LOCKING OUTLET*	SEE ELECTRICAL DRAWINGS FOR JUNCTION BOX SIZE	MOUNTED TO CABLE TRAY ABOVE RACK	REFER TO ELECTRICAL DRAWINGS FOR CONDUIT REQUIREMENTS	

RECOMMEND THAT ALL AV REQUESTED OUTLETS BY I.G. WHEN EVER POSSIBLE. A SEPARATE GROUND BAR WITH A COMMON GROUND IS ACCEPTABLE AS WELL.

JUNCTION/ FLOOR/ WALL BOX TYPES

SYMBOL	DESCRIPTION	TYPE & SIZE	MOUNT HEIGHT	CONDUIT REQUIREMENTS	NOTES
J1.1	AUDIO/VISUAL CONNECTION PLATE (TYPICAL)	1 GANG 2½" DEEP JUNCTION BOX	SOH	¾" CONDUIT STUBBED UP TO ACCESSIBLE CEILING SPACE	CONTIGUOUS TO DESIGNATE CABLE HOMERUN LOCATION
J1.2	AUDIO KEYPAD/VOLUME CONTROL	1 GANG 2½" DEEP JUNCTION BOX	SSH	¾" CONDUIT STUBBED UP TO ACCESSIBLE CEILING SPACE	CONTIGUOUS TO DESIGNATE CABLE HOMERUN LOCATION
J1.3	TOUCHPANEL BOX MOUNTED HORIZONTALLY	1 GANG 2½" DEEP JUNCTION BOX MOUNTED HORIZONTALLY	SSH MOUNTED HORIZONTALLY	¾" CONDUIT STUBBED UP TO ACCESSIBLE CEILING SPACE	CONTIGUOUS TO DESIGNATE CABLE HOMERUN LOCATION. SEE DETAIL #3/AV901
J1.4	WALL MOUNTED SPEAKER CONNECTION BOX	1 GANG 2½" DEEP JUNCTION BOX	90" AFF	¾" CONDUIT STUBBED UP TO ACCESSIBLE CEILING SPACE	CONTIGUOUS TO DESIGNATE CABLE HOMERUN LOCATION
J2.1	AUDIO/VISUAL CONNECTION PLATE	2 GANG 2½" DEEP JUNCTION BOX	SOH	1" CONDUIT STUBBED UP TO ACCESSIBLE CEILING SPACE	CONTIGUOUS TO DESIGNATE CABLE HOMERUN LOCATION
J2.2	AUDIO/VISUAL CONTROL PLATE	2 GANG 2½" DEEP JUNCTION BOX	SSH	¾" CONDUIT STUBBED UP TO ACCESSIBLE CEILING SPACE	CONTIGUOUS TO DESIGNATE CABLE HOMERUN LOCATION
J2.3	ADVANCED AUDIO/VIDEO KEYPAD	CRESTRON MODEL BB-6L	SSH	¾" CONDUIT STUBBED UP TO ACCESSIBLE CEILING SPACE	CONTIGUOUS TO DESIGNATE CABLE HOMERUN LOCATION
J2.4	AUDIO/VIDEO/CONTROL TOUCHPANEL	CRESTRON MODEL BB-4L	SSH	¾" CONDUIT STUBBED UP TO ACCESSIBLE CEILING SPACE	CONTIGUOUS TO DESIGNATE CABLE HOMERUN LOCATION
J3.1	AUDIO/VISUAL CONNECTION PLATE	3 GANG 2½" DEEP JUNCTION BOX	SOH	1¼" CONDUIT STUBBED UP TO ACCESSIBLE CEILING SPACE	CONTIGUOUS TO DESIGNATE CABLE HOMERUN LOCATION
J3.2	AUDIO/VISUAL CONTROL PLATE	3 GANG 2½" DEEP JUNCTION BOX	SSH	¾" CONDUIT STUBBED UP TO ACCESSIBLE CEILING SPACE	CONTIGUOUS TO DESIGNATE CABLE HOMERUN LOCATION
J3.3	AUDIO/VISUAL CONNECTION PLATE	3 GANG 2½" DEEP JUNCTION BOX	SOH	1¼" CONDUIT STUBBED UP TO ACCESSIBLE CEILING SPACE	RUN TO C2.1 LOCATED IN CEILING NEAR PROJECTOR LOCATION
J3.4	AUDIO/VIDEO/CONTROL TOUCHPANEL	CRESTRON MODEL BB-6L	SSH	¾" CONDUIT STUBBED UP TO ACCESSIBLE CEILING SPACE	CONTIGUOUS TO DESIGNATE CABLE HOMERUN LOCATION
J4.1	AUDIO/VISUAL CONNECTION PLATE	4 GANG 3" DEEP JUNCTION BOX	SOH	(2) 1¼" CONDUITS & (1) ¾" CONDUIT STUBBED UP TO ACCESSIBLE CEILING SPACE	CONTIGUOUS TO DESIGNATE CABLE HOMERUN LOCATION. COORDINATE LOCATION WITH ID, DV, & ELECTRICAL.
J4.2	AUDIO/VISUAL CONNECTION PLATE	4 GANG 2½" DEEP JUNCTION BOX	SSH	1¼" CONDUIT STUBBED UP TO ACCESSIBLE CEILING SPACE	CONTIGUOUS TO DESIGNATE CABLE HOMERUN LOCATION
J4.3	AUDIO/VISUAL CONNECTION PLATE	4 GANG 2½" DEEP JUNCTION BOX	SOH	1¼" CONDUIT STUBBED UP TO ACCESSIBLE CEILING SPACE	CONTIGUOUS TO DESIGNATE CABLE HOMERUN LOCATION
J4.4	AUDIO/VIDEO/CONTROL TOUCHPANEL	CRESTRON MODEL BB-6L	SSH	¾" CONDUIT STUBBED UP TO ACCESSIBLE CEILING SPACE	CONTIGUOUS TO DESIGNATE CABLE HOMERUN LOCATION
C2.1	CAMERA JUNCTION BOX LOCATIONS	2 GANG STANDARD JUNCTION BOX	FLUSH TO CEILING	¾" CONDUIT STUBBED OVER TO ACCESSIBLE CEILING SPACE	CONTIGUOUS TO DESIGNATE CABLE HOMERUN LOCATION
C2.4	DRAPER ACCESS PANEL LOCATION	DRAPER ACCESS PANEL TO LIFT	NA	NA	NA
WB.1	AUDIO/VIDEO CONNECTOR BOX FOR FLAT PANEL DISPLAYS	CHIEF MODEL PAC501B WALL BOX	SEE DETAILS	(1) 1¼" CONDUIT STUBBED UP TO ACCESSIBLE CEILING SPACE	CONTIGUOUS TO DESIGNATE CABLE HOMERUN LOCATION
WB.2	DIGITAL SIGN BACK BOX	UNIT TO BE PROVIDED BY DIGITAL SIGNAGE PROVIDER.	NA	NA	COORDINATE REQUIREMENTS WITH DIGITAL SIGNAGE PROVIDED.
WB.3	SPECIALTY AUDIO/VISUAL WALL MOUNTED INPUT PLATE	FSR MODEL WB-X2-GNG WITH WB-X2-CVR-***(BLK-BLACK, WHT-WHITE)	18" ON CENTER AFF	(1)1" & (1)1¼" CONDUIT STUBBED UP TO ACCESSIBLE CEILING SPACE	CONTIGUOUS TO DESIGNATE CABLE HOMERUN LOCATION
WB.4	SPECIALTY AUDIO/VISUAL WALL MOUNTED INPUT PLATE	FSR FL-500P (4" DEEP BOX) WITH FL-500P-JL WALL MOUNT KIT	18" ON CENTER AFF	SEE DRAWING DETAILS FOR CONDUIT REQUIREMENTS	CONTIGUOUS TO DESIGNATE CABLE HOMERUN LOCATION
FB.1	AUDIO/VISUAL CONNECTOR PLATE FLOOR BOX	FSR FL-500P (5" DEEP BOX) WITH COVER. COVER #FL-500P-C COORDINATE COVER TYPE WITH ID	MOUNTED IN FLOOR	SEE DRAWING DETAILS FOR CONDUIT REQUIREMENTS	SEE DRAWING NOTES FOR CONDUIT PATHWAY REQUIREMENTS
FB.2	AUDIO/VISUAL CONNECTOR PLATE FLOOR BOX	FSR FL-700 (5¼" DEEP BOX) WITH COVER. COORDINATE COVER TYPE WITH ID	MOUNTED IN FLOOR	SEE DRAWING DETAILS FOR CONDUIT REQUIREMENTS	SEE DRAWING NOTES FOR CONDUIT PATHWAY REQUIREMENTS

PLEASE NOTE THAT NOT ALL SYMBOLS ON THIS PAGE WILL BE USED ON THIS PROJECT.
** = DENOTES LOCATION FOR COLOR SELECTION.*

EQUIPMENT SYMBOLS AND NOTES

SYMBOL	TYPE	BRAND	MODEL	FACEPLATE	CONNECTION	NOTES
ST.1a	1	DRAPER	114209	NA	UNTERMINATED POWER AND CT1 CABLE	SEE DETAIL FOR MOUNTING INSTRUCTIONS
ST.2a	1	DRAPER	100539 Q	NA	UNTERMINATED POWER AND CT1 CABLE	SEE DETAIL FOR MOUNTING INSTRUCTIONS
ST.3a	1	DRAPER	111611 Q	NA	UNTERMINATED POWER AND CT1 CABLE	SEE DETAIL FOR MOUNTING INSTRUCTIONS
ST.4a	1	DRAPER	100331	NA	UNTERMINATED POWER AND CT1 CABLE	SEE DETAIL FOR MOUNTING INSTRUCTIONS
FP.1a	11	CRESTRON	DM-TX-1G	4 GANG DECORA		
		CRESTRON	DM-RX-1G			
		ATTEROTECH	INBOX X2			

CEILING BOX/ LIFT/ SPEAKER/ DISPLAY SYMBOLS AND NOTES

SYMBOL	DESCRIPTION	BRAND, MODEL, TYPE	MOUNT HEIGHT	NOTES
(S)	CEILING MOUNTED SPEAKER LOCATION MARKER	NA	NA	NA
(S1)	TANNOY	CVS 4	NA	TAP AT 15W
(S2)	TANNOY	CMS601	NA	TAP AT 30W
(S3)	TANNOY	CMS801	NA	TAP AT 60W
[S1]	TANNOY	Di6t	84"	TAP AT 30W
(1)	PROJECTOR MOUNT LOCATION	DRAPER REVELATION PROJECTOR LIFT W/ DRAPER CEILING ACCESS DOOR.	NA	NA
(2)	PROJECTOR LIFT LOCATION	DISPLAY DEVICES DL3B-9.5 WITH MOUNT FOR BENQ SP920P PROJECTOR, OPT-3L ENCLOSURE, & OPT-9 CONTROL	IN CEILING	SEE DETAIL SHEETS FOR ADDITIONAL INFORMATION.
	PROJECTION SCREEN LOCATION	SEE EQUIPMENT TABS FOR MODEL AND TYPE	IN CEILING	SEE DETAIL SHEETS FOR ADDITIONAL INFORMATION
	FLAT PANEL LOCATION	SEE EQUIPMENT TABS FOR MODEL AND TYPE	60" ON CENTER AFF (UOS)	SEE DETAIL SHEETS FOR ADDITIONAL INFORMATION

PLEASE NOTE THAT NOT ALL SYMBOLS ON THIS PAGE WILL BE USED ON THIS PROJECT.
ALL MOUNTED EQUIPMENT WILL FOLLOW THE MANUFACTURES RECOMMENDED INSTALLATION PROCEDURES. CEILING MOUNTED SPEAKERS WILL BE SUPPORTED WITH TILE BRIDGE, OR OTHER MANUFACTURE'S APPROVED MOUNTING SYSTEM, BASED ON FIELD CONDITIONS. THE PAINT GUARD WILL BE INSTALLED AND KEPT IN PLACE UNTIL FINAL SETUP AND CONFIGURATION OF THE SYSTEM.
** = DENOTES LOCATION FOR COLOR SELECTION.*

CABLE TYPE & DESCRIPTION

SYMBOL	BRAND	MODEL #	DESCRIPTION
QM1	CRESTRON	CRESCAT-QM-(P)/(NP)	1 PAIR 18 AWG & 1 TWISTED PAIR 22 AWG W/SHIELD CABLE, AND 1 CAT5e CABLE, PLENUM WHERE REQ.
DM1	CRESTRON	DM-CBL-(P)/(NP)	DIGITAL MEDIA CABLE, PLENUM WERE REQUIRED. REQUIRES DM-CONN CONNECTOR FOR TERMINATON. ALL RUNS GREATER THAN 150' REQUIRE CRESTRON DM-DR EVERY 150'. MAX. DISTANCE 450'
DV1	LIBERTY	24-4P-P-L6-EN-*	CATEGORY 6e, PLENUM
DV2	LIBERTY	24-4P-L6ASH	CATEGORY 6A SHIELDED, NON-PLENUM
DV3	LIBERTY	24-4P-P-L5SH-*	CATEGORY 5e SHIELDED, PLENUM
CO1	LIBERTY	RG6-QUAD-CMP-WHT	18 AWG SOLID CORE QUAD SHIELDED COAX, PLENUM
CO2	LIBERTY	RG11-QUAD-PWHT	14 AWG SOLID CORE QUAD SHIELDED COAX, PLENUM
SD1	LIBERTY	18-CMR-SD-*	18 AWG SOLID CORE SHIELD SERIAL DIGITAL VIDEO CABLE, NON-PLENUM
SD2	LIBERTY	18-CMP-VID-COAX-*	18 AWG SOLID CORE SHIELD SERIAL DIGITAL VIDEO CABLE, PLENUM
SP1	LIBERTY	18-2C-(P/NP)-*	18 AWG 2 CONDUCTOR SPEAKER WIRE (PLENUM WHERE REQUIRED)
SP2	LIBERTY	16-2C-(P/NP)-*	16 AWG 2 CONDUCTOR SPEAKER WIRE (PLENUM WHERE REQUIRED)
SP3	LIBERTY	18-4C-(P/NP)-*	18 AWG 4 CONDUCTOR SPEAKER WIRE (PLENUM WHERE REQUIRED)
SP4	LIBERTY	16-4C-(P/NP)-*	16 AWG 4 CONDUCTOR SPEAKER WIRE (PLENUM WHERE REQUIRED)
CT1	CRESTRON	CRESNET-(P)/(NP)	1 PAIR 18 AWG & 1 TWISTED PAIR 22 AWG W/SHIELD CABLE, PLENUM WHERE REQUIRED
CT2	CRESTRON	CRESNET-HP-NP	1 PAIR 12 AWG & 1 TWISTED PAIR 22 AWG W/SHIELD CABLE, NON-PLENUM
CT3	LIBERTY	18-2P-(P)INDSH-*	18 AWG 2 PAIR CONTROL WIRE WITH INDIVIDUAL SHIELDING PER PAIR, (PLENUM WHERE REQUIRED)
CT4	LIBERTY	18-2C-(P)SH-*	18 AWG 2 CONDUCTOR SINGLE SHIELD CONTROL WIRE, (PLENUM WHERE REQUIRED)
CT5	LIBERTY	22-2C -(P)SH-*	22 AWG 2 CONDUCTOR SINGLE SHIELD CONTROL WIRE, (PLENUM WHERE REQUIRED)
CT6	LIBERTY	22-4C-(P)SH-*	22 AWG 4 CONDUCTOR SINGLE SHIELD CONTROL WIRE, (PLENUM WHERE REQUIRED)
CT7	GENERIC	SERIAL CABLE	SERIAL CONTROL CABLE. SEE MANUFACTURE REQUIREMENT FOR CONFIGURATION
CT8	GENERIC	IR CABLE	IR CONTROL CABLE WITH IR REPEATER. SEE MANUFACTURE FOR CONFIGURATION
AU1	LIBERTY	18-2C-(P)SH-*	18 AWG 2 CONDUCTOR INDIVIDUALLY SHIELDED AUDIO WIRE, (PLENUM WHERE REQUIRED)
AU2	LIBERTY	18-2P-(P)INDSH-*	18 AWG 2 PAIR INDIVIDUALLY SHIELDED AUDIO WIRE, (PLENUM WHERE REQUIRED)
AE1	LIBERTY	24-1P-(P)-DIG-AUDIO	24 AWG 1 PAIR AES/EBU 110OHM DIGITAL AUDIO CABLE (PLENUM WHERE REQUIRED)
VG1	LIBERTY	RGB5C-23-CM(P)	23 AWG 5 CONDUCTOR MINI RGBHV CABLE (PLENUM WHERE REQUIRED)
HD1	LIBERTY	E-HDSM-M-XX	HDMI 1.3 HIGH SPEED (10.2 Gbps) CERTIFIED CABLE
HD2	LIBERTY	E-HDM-M-XX	HDMI MALE TO HDMI MALE CABLE (LENGTHS OVER 20' WILL REQUIRE A LIBERTY DIGITALINX HDMI REPEATER)
HD3	LIBERTY	E-HDM-DVI-X	HDMI MALE TO DVI MALE SINGLE LINK CABLE
HD4	LIBERTY	E-DVIDSL-X	DVI SINGLE LINK MALE TO MALE CABLE

SEE CABLE PULLING GUIDE ON COVER SHEET FOR INSTALLATION GUIDELINES.
** = DENOTES LOCATION FOR COLOR SELECTION.*

ABBREVIATIONS & TERMS

SYMBOL	DESCRIPTION
FB	FIBER OPTIC TERMINATION (INDIVIDUALLY SPECIFIED)
RJ	DATA TYPE CABLE TERMINATION(RJ-11/RJ-45)
RCA	STANDARD AUDIO/VIDEO CONNECTOR TYPE (M/F)
MINI	⅛" AUDIO CONNECTOR TYPE (M/F)(MONO/STEREO)
XLR	THREE PIN BALANCED AUDIO CONNECTOR TYPE (M/F)
SPDIF	COAXIAL RCA DIGITAL AUDIO CONNECTOR TYPE (M/F)
PHONO	¼" AUDIO CONNECTOR TYPE (M/F)(MONO/STEREO)
PH	PHOENIX STYLE CONNECTOR (TYPICALLY FOR CONTROL)
SP/ON	SPEAK ON TYPE CONNECTION (M/F)
VGA	15-PIN CONNECTION TYPE (TYPICAL COMPUTER CONNECTION)
RGBHV	FIVE BNC TYPE CONNECTORS (TYPICAL COMPUTER CONNECTION)
DVI	MULTI-PIN DIGITAL CONNECTOR (TYPICALLY FOR DIGITAL VIDEO)
HDMI	MULTI-PIN DIGITAL CONNECTOR (DIGITAL VIDEO, AUDIO, & CONTROL)
HDCP	HIGH-BANDWIDTH DIGITAL CONTENT PROTECTION
232	9-PIN SERIAL CONTROL CABLE
RG	COAXIAL CABLE CONNECTOR (M/F)
SSH	STANDARD SWITCH HEIGHT (AS DETERMINED BY THE PROJECT PREFERENCE)
SOH	STANDARD OUTLET HEIGHT (AS DETERMINED BY THE PROJECT PREFERENCE)
AFF	ABOVE FINISHED FLOOR
AFC	ABOVE FINISHED CEILING
BFC	BELOW FINISHED CEILING
FP	FLOOR PLAN
RCP	REFLECTIVE CEILING PLAN
UOS	UNLESS OTHERWISE SPECIFIED

nti
network technologies, inc
www.nticonsultants.com
Member BICSI
Member infoComm INTERNATIONAL

THIS DRAWING IS AN INSTRUMENT OF SERVICE AND, AS SUCH, IS THE PROPERTY OF NETWORK TECHNOLOGIES, INC. (NTI). IT IS TO BE USED ONLY FOR THE PROJECT AND SITE SPECIFICALLY IDENTIFIED HEREIN. NO PART OF THIS DOCUMENT SHALL BE REPRODUCED OR TRANSMITTED IN ANY FORM OR BY ANY MEANS, ELECTRONIC OR MECHANICAL, FOR ANY PURPOSE WITHOUT THE EXPRESS WRITTEN PERMISSION OF NETWORK TECHNOLOGIES, INC.

Rabun Rasche Rector Reece
ARCHITECTS
44 Broad Street NW, Suite 300
Atlanta, Georgia 30303
P 404-522-9455 F 404-522-9454

This drawing is the property of Rabun Rasche Rector Reece Architects and is not to be reproduced or copied in whole or in part. It is to be used for the Project and Site specifically identified herein and is not to be used on any other project. It is to be returned upon request. Scale as stated hereon are valid on the original drawing, the size of which is 30 inches high by 42 inches long.

DOUGLASVILLE CONFERENCE CENTER
DOUGLASVILLE, GEORGIA

REVIS.	DATE	REMARKS
	03/09/10	FIRE MARSHAL
	05/14/10	PERMIT SET
	07/16/10	BID SET

SHEET TITLE: SYMBOL & LEGEND LIST AV SYSTEMS

PROJECT NUMBER: 722
DATE: 03/09/10
SHEET NUMBER: AV-0-01

RELEASED FOR CONSTRUCTION

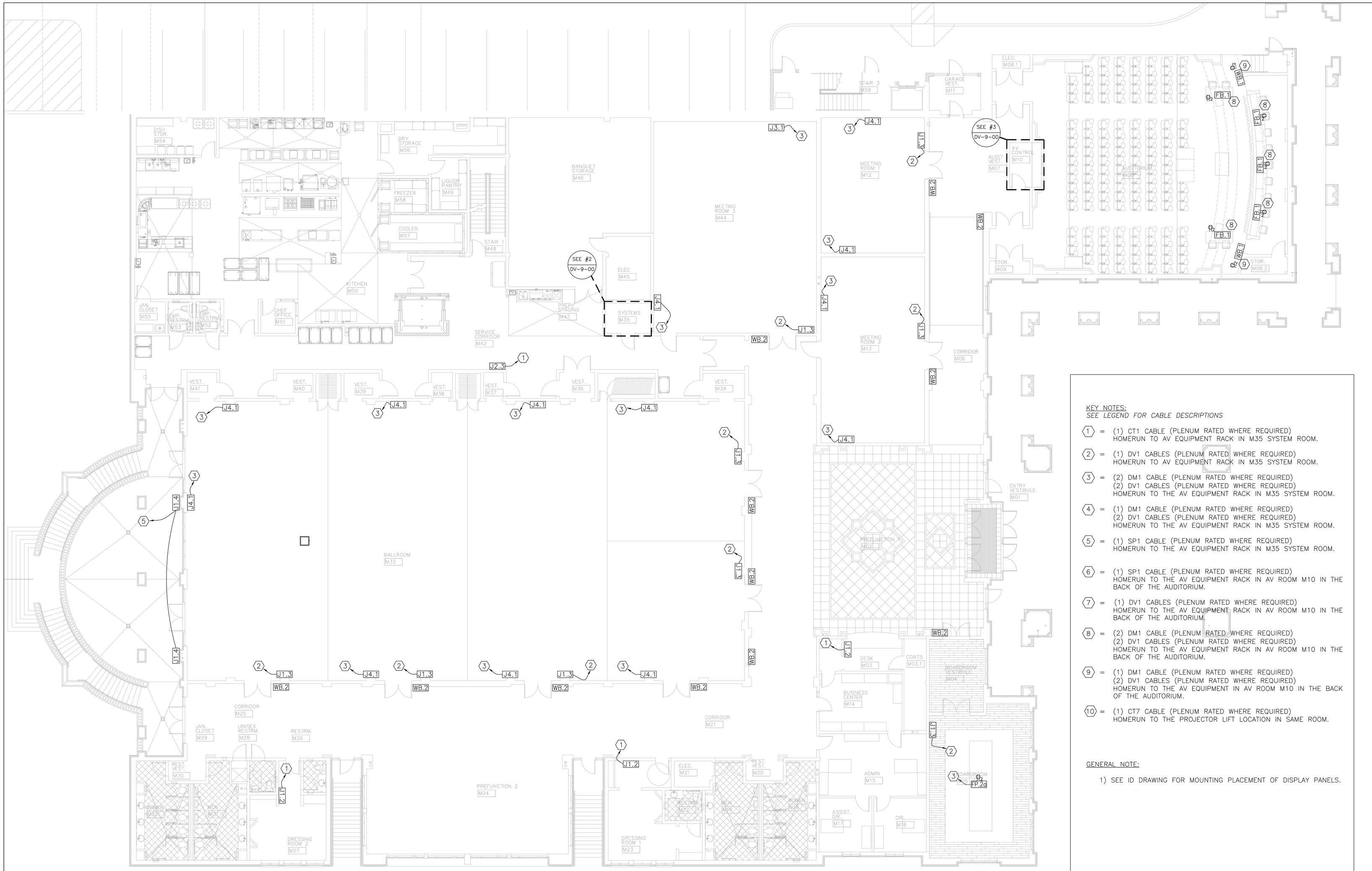

KEY NOTES:
SEE LEGEND FOR CABLE DESCRIPTIONS

1 = (1) CT1 CABLE (PLENUM RATED WHERE REQUIRED)
HOMERUN TO AV EQUIPMENT RACK IN M35 SYSTEM ROOM.

2 = (1) DV1 CABLES (PLENUM RATED WHERE REQUIRED)
HOMERUN TO AV EQUIPMENT RACK IN M35 SYSTEM ROOM.

3 = (2) DM1 CABLE (PLENUM RATED WHERE REQUIRED)
(2) DV1 CABLES (PLENUM RATED WHERE REQUIRED)
HOMERUN TO THE AV EQUIPMENT RACK IN M35 SYSTEM ROOM.

4 = (1) DM1 CABLE (PLENUM RATED WHERE REQUIRED)
(2) DV1 CABLES (PLENUM RATED WHERE REQUIRED)
HOMERUN TO THE AV EQUIPMENT RACK IN M35 SYSTEM ROOM.

5 = (1) SP1 CABLE (PLENUM RATED WHERE REQUIRED)
HOMERUN TO THE AV EQUIPMENT RACK IN M35 SYSTEM ROOM.

6 = (1) SP1 CABLE (PLENUM RATED WHERE REQUIRED)
HOMERUN TO THE AV EQUIPMENT RACK IN AV ROOM M10 IN THE BACK OF THE AUDITORIUM.

7 = (1) DV1 CABLES (PLENUM RATED WHERE REQUIRED)
HOMERUN TO THE AV EQUIPMENT RACK IN AV ROOM M10 IN THE BACK OF THE AUDITORIUM.

8 = (2) DM1 CABLE (PLENUM RATED WHERE REQUIRED)
(2) DV1 CABLES (PLENUM RATED WHERE REQUIRED)
HOMERUN TO THE AV EQUIPMENT RACK IN AV ROOM M10 IN THE BACK OF THE AUDITORIUM.

9 = (1) DM1 CABLE (PLENUM RATED WHERE REQUIRED)
(2) DV1 CABLES (PLENUM RATED WHERE REQUIRED)
HOMERUN TO THE AV EQUIPMENT IN AV ROOM M10 IN THE BACK OF THE AUDITORIUM.

10 = (1) CT7 CABLE (PLENUM RATED WHERE REQUIRED)
HOMERUN TO THE PROJECTOR LIFT LOCATION IN SAME ROOM.

GENERAL NOTE:

1) SEE ID DRAWING FOR MOUNTING PLACEMENT OF DISPLAY PANELS.

1 / AV-1-01 MAIN LEVEL CONFERENCE CENTER – INFRASTRUCTURE – FLOOR – AV SYSTEMS
SCALE : 1/8" = 1'-0"
2009-11-03 PLAN

Rabun Rasche Rector Reece
ARCHITECTS
44 Broad Street NW, Suite 300
Atlanta, Georgia 30303
P 404-522-9455 F 404-522-9454

This drawing is the property of Rabun Rasche Rector Reece Architects and is not to be reproduced or copied in whole or in part. It is to be used for the Project and Site specified herein only and shall not be used on any other project. It is to be returned upon request. Scale as stated hereon are valid on the original drawing, the size of which is 30 inches high by 42 inches long.

DOUGLASVILLE CONFERENCE CENTER

DOUGLASVILLE, GEORGIA

REVIS.	DATE	REMARKS	REVIS.	DATE	REMARKS	REVIS.	DATE	REMARKS	REVIS.	DATE	REMARKS
	03/09/10	FIRE MARSHAL									
	05/14/10	PERMIT SET									
	07/16/10	BID SET									

SHEET TITLE

MAIN LEVEL CONFERENCE CENTER
INFRASTRUCTURE – FLOOR – AV SYSTEMS

PROJECT NUMBER 722

DATE 03/09/10

SHEET NUMBER AV-1-01

nti network technologies, inc
www.nticonsultants.com
470 NORTH CLARITON ST., STE. 101, LAWRENCEVILLE, GA. 30045
TEL: 678.376.0022 FAX: 678.376.0030

THIS DRAWING IS AN INSTRUMENT OF SERVICE AND, AS SUCH, IS THE PROPERTY OF NETWORK TECHNOLOGIES, INC. (NTI). IT IS TO BE USED ONLY FOR THE PROJECT AND SITE SPECIFICALLY IDENTIFIED HEREIN. NO PART OF THIS DRAWING MAY BE REPRODUCED OR TRANSMITTED IN ANY FORM OR BY ANY MEANS, ELECTRONIC OR MECHANICAL, FOR ANY PURPOSES WITHOUT THE EXPRESS WRITTEN PERMISSION OF NETWORK TECHNOLOGIES, INC.
NT JOB NO.: 06-7945

RELEASED FOR CONSTRUCTION

NOTE: CEILING HEIGHTS ARE FROM PRIMARY FLOOR LEVEL WITHIN APPLICABLE ROOM. THE 2 FEET OF DROP WITHIN AUDITORIUM IS NOT REFLECTED IN CEILING HEIGHT TAG.

KEY NOTES:
SEE LEGEND FOR CABLE DESCRIPTIONS

1 = (1) CT1 CABLE (PLENUM RATED WHERE REQUIRED)
HOMERUN TO AV EQUIPMENT RACK IN M35 SYSTEM ROOM.

2 = (1) DV1 CABLES (PLENUM RATED WHERE REQUIRED)
HOMERUN TO AV EQUIPMENT RACK IN M35 SYSTEM ROOM.

3 = (2) DM1 CABLE (PLENUM RATED WHERE REQUIRED)
(2) DV1 CABLES (PLENUM RATED WHERE REQUIRED)
HOMERUN TO THE AV EQUIPMENT RACK IN M35 SYSTEM ROOM.

4 = (1) DM1 CABLE (PLENUM RATED WHERE REQUIRED)
(2) DV1 CABLES (PLENUM RATED WHERE REQUIRED)
HOMERUN TO THE AV EQUIPMENT RACK IN M35 SYSTEM ROOM.

5 = (1) SP1 CABLE (PLENUM RATED WHERE REQUIRED)
HOMERUN TO THE AV EQUIPMENT RACK IN M35 SYSTEM ROOM.

6 = (1) SP1 CABLE (PLENUM RATED WHERE REQUIRED)
HOMERUN TO THE AV EQUIPMENT RACK IN AV ROOM M10 IN THE BACK OF THE AUDITORIUM.

7 = (1) DV1 CABLES (PLENUM RATED WHERE REQUIRED)
HOMERUN TO THE AV EQUIPMENT RACK IN AV ROOM M10 IN THE BACK OF THE AUDITORIUM.

8 = (2) DM1 CABLE (PLENUM RATED WHERE REQUIRED)
(2) DV1 CABLES (PLENUM RATED WHERE REQUIRED)
HOMERUN TO THE AV EQUIPMENT RACK IN AV ROOM M10 IN THE BACK OF THE AUDITORIUM.

9 = (1) DM1 CABLE (PLENUM RATED WHERE REQUIRED)
(2) DV1 CABLES (PLENUM RATED WHERE REQUIRED)
HOMERUN TO THE AV EQUIPMENT IN AV ROOM M10 IN THE BACK OF THE AUDITORIUM.

10 = (1) CT7 CABLE (PLENUM RATED WHERE REQUIRED)
HOMERUN TO THE PROJECTOR LIFT LOCATION IN SAME ROOM.

GENERAL NOTE:

1) SEE ID DRAWING FOR MOUNTING PLACEMENT OF DISPLAY PANELS.

1 / AV-2-01 MAIN LEVEL CONFERENCE CENTER – INFRASTRUCTURE – RCP – AV SYSTEMS
SCALE : 1/8" = 1'-0"
2009-12-02 PLAN

nti network technologies, inc
www.nticonsultants.com
470 NORTH CLAYTON ST., STE. 202, LAWRENCEVILLE, GA 30046
770.1800.4.TMRTT 770.1800.4.TMMFAX

BICSI Member infoComm INTERNATIONAL
THIS DRAWING IS AN INSTRUMENT OF SERVICE AND IS THE PROPERTY OF NETWORK TECHNOLOGIES, INC. (NTI, INC.). IT IS TO BE USED ONLY FOR THE PROJECT AND SITE SPECIFICALLY IDENTIFIED HEREIN. THIS DOCUMENT SHALL BE REPRODUCED OR TRANSMITTED IN ANY FORM OR BY ANY MEANS, ELECTRONIC OR MECHANICAL, FOR ANY PURPOSE, WITHOUT THE EXPRESS WRITTEN PERMISSION OF NETWORK TECHNOLOGIES, INC.
NT JOB NO. 09-1765

Rabun Rasche Rector Reece
ARCHITECTS
44 Broad Street NW, Suite 300
Atlanta, Georgia 30303
P 404-522-9455 F 404-522-9454

This drawing is the property of Rabun Rasche Rector Reece Architects and is not to be reproduced or used in whole or in part. It is to be used for the Project and Site specifically identified herein and is not to be used on any other project. It is to be returned upon request. Scale as stated hereon are valid on the original drawing, the size of which is 20 inches high by 42 inches long.

DOUGLASVILLE CONFERENCE CENTER

DOUGLASVILLE, GEORGIA

REVIS.	DATE	REMARKS
	03/09/10	FIRE MARSHAL
	05/14/10	PERMIT SET
	07/16/10	BID SET

SHEET TITLE

MAIN LEVEL CONFERENCE CENTER
INFRASTRUCTURE – RCP – AV SYSTEMS

PROJECT NUMBER: 722

DATE: 03/09/10

SHEET NUMBER: AV-2-01

RELEASED FOR CONSTRUCTION

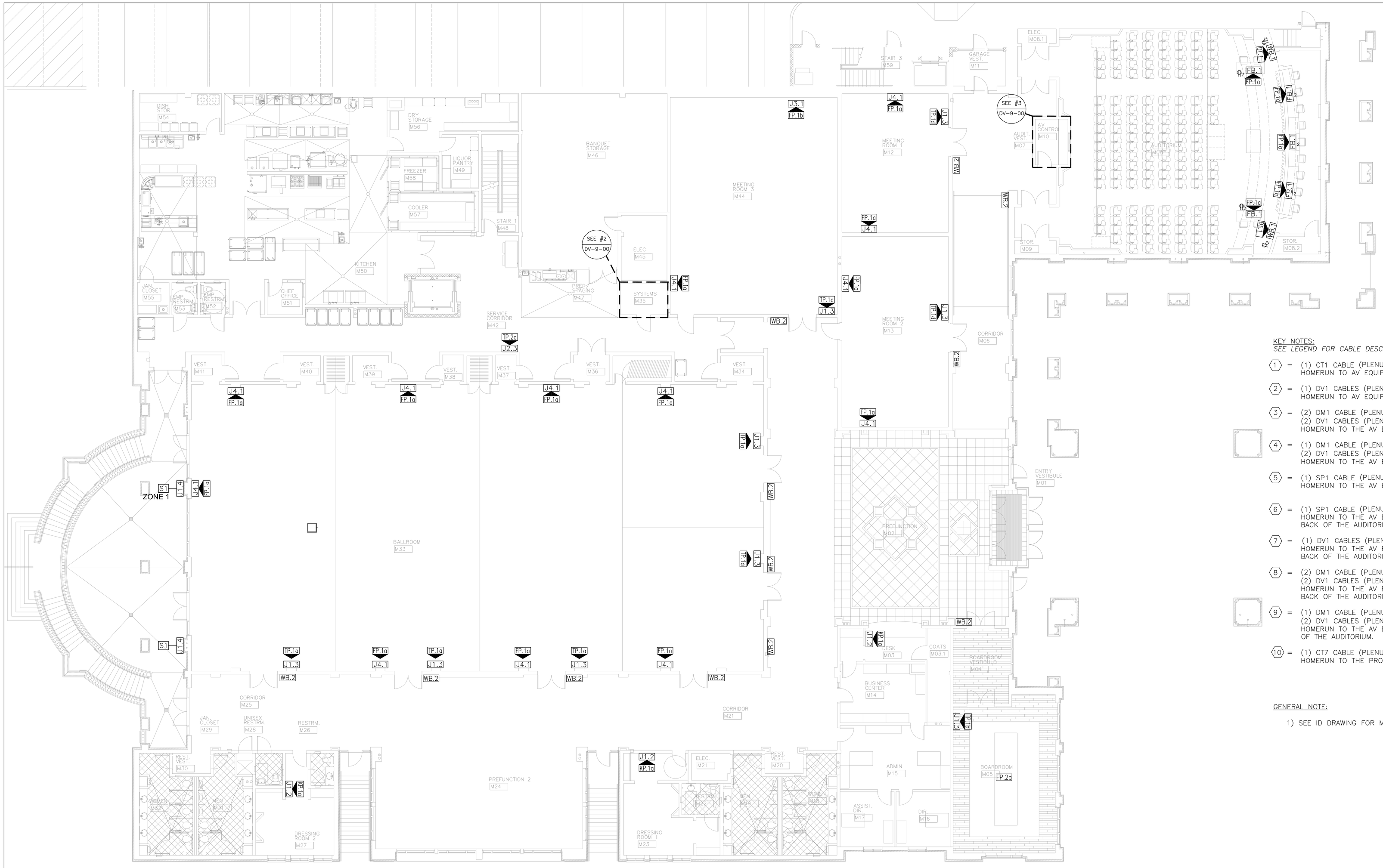

KEY NOTES:
SEE LEGEND FOR CABLE DESCRIPTIONS

1 = (1) CT1 CABLE (PLENUM RATED WHERE REQUIRED)
HOMERUN TO AV EQUIPMENT RACK IN M35 SYSTEM ROOM.

2 = (1) DV1 CABLES (PLENUM RATED WHERE REQUIRED)
HOMERUN TO AV EQUIPMENT RACK IN M35 SYSTEM ROOM.

3 = (2) DM1 CABLE (PLENUM RATED WHERE REQUIRED)
(2) DV1 CABLES (PLENUM RATED WHERE REQUIRED)
HOMERUN TO THE AV EQUIPMENT RACK IN M35 SYSTEM ROOM.

4 = (1) DM1 CABLE (PLENUM RATED WHERE REQUIRED)
(2) DV1 CABLES (PLENUM RATED WHERE REQUIRED)
HOMERUN TO THE AV EQUIPMENT RACK IN M35 SYSTEM ROOM.

5 = (1) SP1 CABLE (PLENUM RATED WHERE REQUIRED)
HOMERUN TO THE AV EQUIPMENT RACK IN M35 SYSTEM ROOM.

6 = (1) SP1 CABLE (PLENUM RATED WHERE REQUIRED)
HOMERUN TO THE AV EQUIPMENT RACK IN AV ROOM M10 IN THE BACK OF THE AUDITORIUM.

7 = (1) DV1 CABLES (PLENUM RATED WHERE REQUIRED)
HOMERUN TO THE AV EQUIPMENT RACK IN AV ROOM M10 IN THE BACK OF THE AUDITORIUM.

8 = (2) DM1 CABLE (PLENUM RATED WHERE REQUIRED)
(2) DV1 CABLES (PLENUM RATED WHERE REQUIRED)
HOMERUN TO THE AV EQUIPMENT RACK IN AV ROOM M10 IN THE BACK OF THE AUDITORIUM.

9 = (1) DM1 CABLE (PLENUM RATED WHERE REQUIRED)
(2) DV1 CABLES (PLENUM RATED WHERE REQUIRED)
HOMERUN TO THE AV EQUIPMENT IN AV ROOM M10 IN THE BACK OF THE AUDITORIUM.

10 = (1) CT7 CABLE (PLENUM RATED WHERE REQUIRED)
HOMERUN TO THE PROJECTOR LIFT LOCATION IN SAME ROOM.

GENERAL NOTE:

1) SEE ID DRAWING FOR MOUNTING PLACEMENT OF DISPLAY PANELS.

1 / AV-3-01 MAIN LEVEL CONFERENCE CENTER – EQUIPMENT – FLOOR – AV SYSTEMS
SCALE : 1/8" = 1'-0"
2008-05-04 PLAN

nti network technologies, inc
www.nticonsultants.com
470 NORTH CLEATON ST., STE. 205, LAWRENCEVILLE, GA. 30045
TEL (404) 374-6051 / FAX (404) 374-6055

BICSI Member
infoComm INTERNATIONAL

THIS DRAWING IS AN INSTRUMENT OF SERVICE AND, AS SUCH, IS THE PROPERTY OF NETWORK TECHNOLOGIES, INC. (NTI). IT IS TO BE USED ONLY FOR THE PROJECT AND SITE LISTED HEREIN. ANY OTHER USE IS PROHIBITED AND EXPRESSLY REVOKED. NO OTHER RIGHTS TO THE DRAWING OR ANY PART THEREOF ARE GRANTED IN ANY FORM OR BY ANY MEANS, ELECTRONIC OR MECHANICAL, FOR ANY PURPOSE WITHOUT THE EXPRESS WRITTEN PERMISSION OF NETWORK TECHNOLOGIES, INC.
NTI JOB NO. 08-7945

Rabun Rasche Rector Reece
ARCHITECTS
44 Broad Street NW, Suite 300
Atlanta, Georgia 30303
P 404-522-9455 F 404-522-9454

This drawing is the property of Rabun Rasche Rector Reece Architects and is not to be reproduced or copied in whole or in part. It is to be used for the Project and Site specifically identified herein and is not to be used on any other project. It is to be returned upon request. Scale as stated hereon are valid on the original drawing, the size of which is 30 inches high by 42 inches long.

DOUGLASVILLE CONFERENCE CENTER
DOUGLASVILLE, GEORGIA

REVIS.	DATE	REMARKS
	03/09/10	FIRE MARSHAL
	05/14/10	PERMIT SET
	07/16/10	BID SET

SHEET TITLE
MAIN LEVEL CONFERENCE CENTER
EQUIPMENT – FLOOR – AV SYSTEMS

PROJECT NUMBER 722
DATE 03/09/10
SHEET NUMBER AV-3-01

RELEASED FOR CONSTRUCTION

NOTE: CEILING HEIGHTS ARE FROM PRIMARY FLOOR LEVEL WITHIN APPLICABLE ROOM. THE 2 FEET OF DROP WITHIN AUDITORIUM IS NOT REFLECTED IN CEILING HEIGHT TAG.

KEY NOTES:
SEE LEGEND FOR CABLE DESCRIPTIONS

1 = (1) CT1 CABLE (PLENUM RATED WHERE REQUIRED)
HOMERUN TO AV EQUIPMENT RACK IN M35 SYSTEM ROOM.

2 = (1) DV1 CABLES (PLENUM RATED WHERE REQUIRED)
HOMERUN TO AV EQUIPMENT RACK IN M35 SYSTEM ROOM.

3 = (2) DM1 CABLE (PLENUM RATED WHERE REQUIRED)
(2) DV1 CABLES (PLENUM RATED WHERE REQUIRED)
HOMERUN TO THE AV EQUIPMENT RACK IN M35 SYSTEM ROOM.

4 = (1) DM1 CABLE (PLENUM RATED WHERE REQUIRED)
(2) DV1 CABLES (PLENUM RATED WHERE REQUIRED)
HOMERUN TO THE AV EQUIPMENT RACK IN M35 SYSTEM ROOM.

5 = (1) SP1 CABLE (PLENUM RATED WHERE REQUIRED)
HOMERUN TO THE AV EQUIPMENT RACK IN M35 SYSTEM ROOM.

6 = (1) SP1 CABLE (PLENUM RATED WHERE REQUIRED)
HOMERUN TO THE AV EQUIPMENT RACK IN AV ROOM M10 IN THE BACK OF THE AUDITORIUM.

7 = (1) DV1 CABLES (PLENUM RATED WHERE REQUIRED)
HOMERUN TO THE AV EQUIPMENT RACK IN AV ROOM M10 IN THE BACK OF THE AUDITORIUM.

8 = (2) DM1 CABLE (PLENUM RATED WHERE REQUIRED)
(2) DV1 CABLES (PLENUM RATED WHERE REQUIRED)
HOMERUN TO THE AV EQUIPMENT RACK IN AV ROOM M10 IN THE BACK OF THE AUDITORIUM.

9 = (1) DM1 CABLE (PLENUM RATED WHERE REQUIRED)
(2) DV1 CABLES (PLENUM RATED WHERE REQUIRED)
HOMERUN TO THE AV EQUIPMENT IN AV ROOM M10 IN THE BACK OF THE AUDITORIUM.

10 = (1) CT7 CABLE (PLENUM RATED WHERE REQUIRED)
HOMERUN TO THE PROJECTOR LIFT LOCATION IN SAME ROOM.

GENERAL NOTE:

1) SEE ID DRAWING FOR MOUNTING PLACEMENT OF DISPLAY PANELS.

1 / AV-4-01 MAIN LEVEL CONFERENCE CENTER – EQUIPMENT – RCP – AV SYSTEMS
SCALE : 1/8" = 1'-0"
2008-05-04 PLAN

nti network technologies, inc
www.nticonsultants.com
470 NORTH CLAYTON ST. LIVE OAK, LAWRENCEVILLE, GA 30045
TEL (404) 373-8472 FAX (404) 373-8474

THIS DRAWING IS AN INSTRUMENT OF SERVICE AND, AT SUCH, IS THE PROPERTY OF NETWORK TECHNOLOGIES, INC. (NTI). IT IS TO BE USED ONLY FOR THE PROJECT AND SITE SPECIFICALLY IDENTIFIED HEREIN AND IS NOT TO BE USED ON ANY OTHER PROJECT OR SITE. NO PART OF THIS DOCUMENT SHALL BE REPRODUCED OR TRANSMITTED IN ANY FORM OR BY ANY MEANS, ELECTRONIC OR MECHANICAL, INCLUDING PHOTOCOPYING, WITHOUT THE EXPRESS WRITTEN PERMISSION OF NETWORK TECHNOLOGIES, INC.
NTI JOB NO. 08-1540

Rabun Rasche Rector Reece
ARCHITECTS
44 Broad Street NW, Suite 300
Atlanta, Georgia 30303
P 404-522-9455 F 404-522-9454

This drawing is the property of Rabun Rasche Rector Reece Architects and is not to be reproduced, changed or made or in part, it is to be used for the Project and Site specifically identified herein and is not to be used on any other project. It is to be returned upon request. Scale as stated hereon are valid on the original drawing, the size of which is 30 inches high by 42 inches long.

DOUGLASVILLE CONFERENCE CENTER
DOUGLASVILLE, GEORGIA

REVIS.	DATE	REMARKS	REVIS.	DATE	REMARKS	REVIS.	DATE	REMARKS	REVIS.	DATE	REMARKS
	03/09/10	FIRE MARSHAL									
	05/14/10	PERMIT SET									
	07/16/10	BID SET									

SHEET TITLE
MAIN LEVEL CONFERENCE CENTER
EQUIPMENT – RCP – AV SYSTEMS

PROJECT NUMBER 722
DATE 03/09/10
SHEET NUMBER AV-4-01

RELEASED FOR CONSTRUCTION

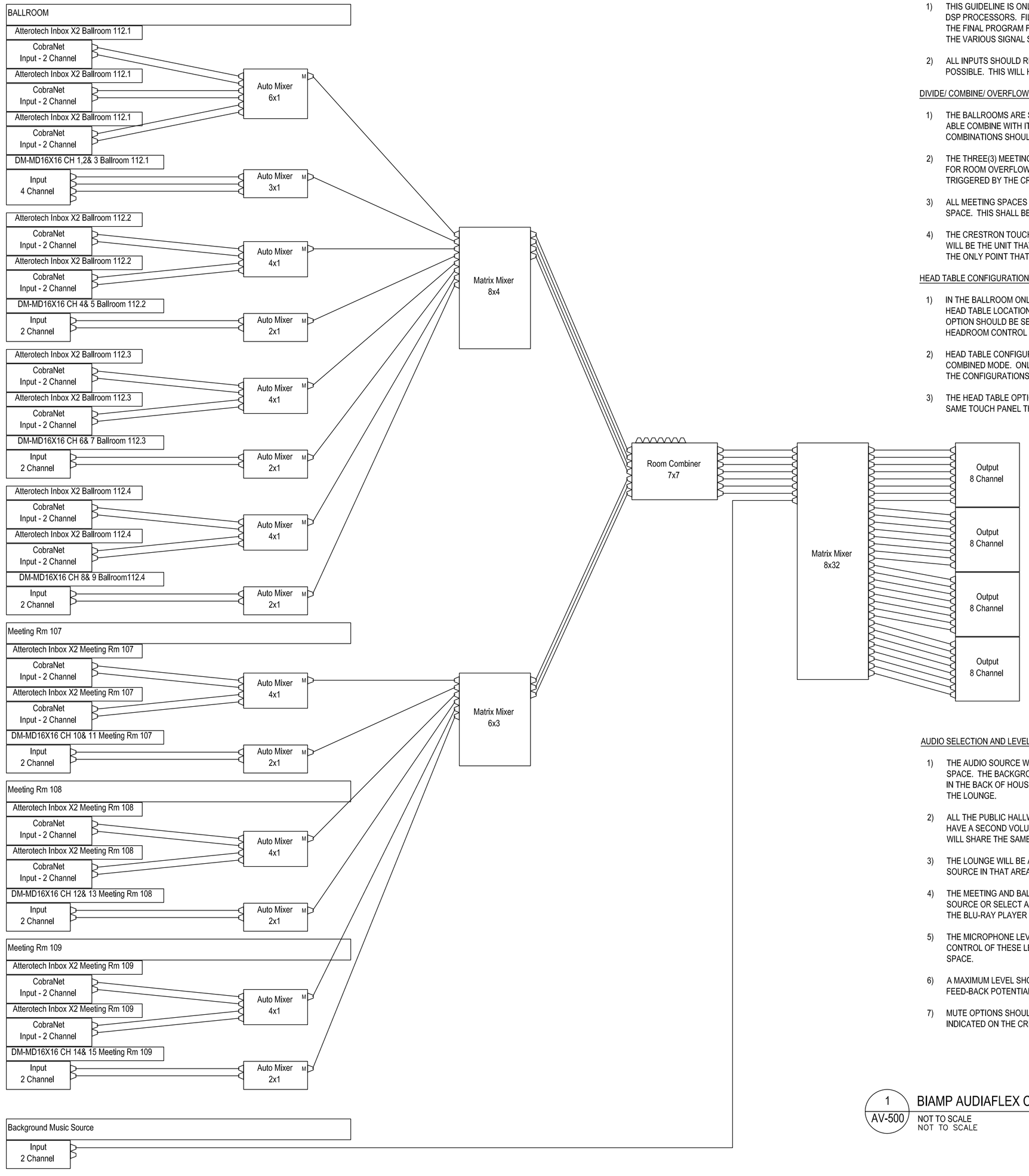

PROGRAMMING GUIDELINE:

1) THIS GUIDELINE IS ONLY INTENDED AS A GENERAL PROGRAM GUIDELINE FOR THE BIAMP AUDIAFLEX DSP PROCESSORS. FILTERS, PROCESSORS, EQ, AND OTHER RELATED DSP SHOULD BE CONSIDERED IN THE FINAL PROGRAM FOR THIS SYSTEM IN ORDER TO CREATE AN OPTIMUM PERFORMANCE LEVEL FROM THE VARIOUS SIGNAL SOURCES.

2) ALL INPUTS SHOULD REMAIN ON THE SAME PROCESSOR AS THEIR RELATED ZONED OUTPUT WHENEVER POSSIBLE. THIS WILL HELP REDUCE ANY POTENTIAL LATENCY ISSUES BETWEEN PROCESSORS.

DIVIDE/ COMBINE/ OVERFLOW:

1) THE BALLROOMS ARE SEPARATED INTO FOUR(4) DEVISABLE SECTIONS. EACH SECTION SHOULD BE ABLE COMBINE WITH ITS ADJACENT SECTION AND/OR COMBINE INTO A LARGE ROOM. THESE COMBINATIONS SHOULD BE SET AS PRESETS TO BE TRIGGERED BY THE CRESTRON CONTROL SYSTEM.

2) THE THREE(3) MEETING ROOMS SHOULD BE CONFIGURED SEPARATELY BUT SHOULD HAVE AN OPTION FOR ROOM OVERFLOW FROM ANY ROOM TO ANY ROOM. THIS SHALL BE DONE AS PRESETS TO BE TRIGGERED BY THE CRESTRON CONTROL SYSTEM.

3) ALL MEETING SPACES SHOULD BE ABLE TO ACT AS POTENTIAL OVERFLOW FROM ANY SPACE TO ANY SPACE. THIS SHALL BE DONE AS PRESETS TO BE TRIGGERED BY THE CRESTRON CONTROL SYSTEM.

4) THE CRESTRON TOUCH PANEL LOCATED IN THE BACK OF HOUSE AREA ADJACENT TO THE BALLROOM WILL BE THE UNIT THAT ESTABLISHED THE COMBINATION OF ROOM CONFIGURATIONS. THIS WILL BE THE ONLY POINT THAT HAS THIS ABILITY.

HEAD TABLE CONFIGURATION:

1) IN THE BALLROOM ONLY, THE SPEAKERS HAVE BEEN SEPARATED INTO PAIRS. THESE ARE POSSIBLE HEAD TABLE LOCATIONS DEPENDING ON THE CONFIGURATION OF THE ROOM. EACH HEAD TABLE OPTION SHOULD BE SET AT APPROX. -6db LOWER THAN THE OTHER SPEAKERS TO ALLOW FOR GREATER HEADROOM CONTROL OF THE AUDIO LEVELS.

2) HEAD TABLE CONFIGURATIONS SHOULD BE MADE FOR THE ROOMS AS SEPARATED, AND ALSO IN COMBINED MODE. ONLY CONFIGURATIONS THAT ARE MOST PROBABLE NEED TO BE CONSIDERED FOR THE CONFIGURATIONS OPTIONS.

3) THE HEAD TABLE OPTIONS WILL BE DONE WITH PRESETS IN THE BIAMP UNIT AND TRIGGERED BY THE SAME TOUCH PANEL THAT IS USED TO CONFIGURE THE ROOM COMBINATIONS.

AUDIO SELECTION AND LEVELS:

1) THE AUDIO SOURCE WILL BE SELECTED BY CRESTRON TOUCH PANELS IN EACH MEETING OR BALLROOM SPACE. THE BACKGROUND MUSIC IN THE PUBLIC SPACES WILL BE CONTROLLED BY THE TOUCH PANEL IN THE BACK OF HOUSE AREA. THE LOUNGE MUSIC WILL BE CONTROLLED BY THE KEYPAD LOCATED IN THE LOUNGE.

2) ALL THE PUBLIC HALLWAYS SHALL BE TREATED AS ONE ZONE FOR VOLUME. THE RESTROOMS WILL HAVE A SECOND VOLUME CONTROL FROM THE SAME REMOTE AS THE PUBLIC HALLWAYS. BOTH AREAS WILL SHARE THE SAME SOURCE.

3) THE LOUNGE WILL BE ABLE TO SHARE THE SAME SOURCE AS THE PUBLIC SPACES OR HAVE A SEPARATE SOURCE IN THAT AREA.

4) THE MEETING AND BALLROOM SPACES SHALL BE ABLE TO PLAYBACK THE MAIN BACKGROUND MUSIC SOURCE OR SELECT A LOCAL SOURCE FROM ONE OF THE FACEPLATES IN THE ROOM. THE AUDIO FROM THE BLU-RAY PLAYER MAY ALSO BE SELECTED AS A SOURCE.

5) THE MICROPHONE LEVELS SHOULD BE TREATED SEPARATELY FROM THE LINE LEVEL AUDIO SIGNALS. CONTROL OF THESE LEVELS SHOULD BE ADJUSTED LOCALLY BY THE CRESTRON TOUCH PANEL IN EACH SPACE.

6) A MAXIMUM LEVEL SHOULD BE ESTABLISHED IN THE DSP PROGRAMMING IN ORDER TO REDUCE FEED-BACK POTENTIALS OR EXCESSIVE VOLUME LEVELS.

7) MUTE OPTIONS SHOULD BE AVAILABLE FOR EACH AUDIO LEVEL. THIS MUTE SHOULD ALSO BE CLEARLY INDICATED ON THE CRESTRON TOUCH PANEL WHEN ENGAGED.

1 / AV-500 BIAMP AUDIAFLEX CONFIGURATION GUIDELINES

NOT TO SCALE
NOT TO SCALE

PROGRAMMING SHEET A AV SYSTEMS

nti network technologies, inc
www.nticonsultants.com
470 NORTH CLAYTON ST., STE. 202, LAWRENCEVILLE, GA 30046
(770) 8004-2 FAX(770) 2-12-4000 (Atlanta)

THIS DRAWING IS AN INSTRUMENT OF SERVICE AND, AT SUCH, IS THE PROPERTY OF NETWORK TECHNOLOGIES, INC. (NTI). THE IDEAS, DESIGNS, AND PLANS ILLUSTRATED AND SITE SPECIFICALLY DEPICTED HEREIN, AS PART OF THIS DOCUMENT SHALL BE REPRODUCED OR TRANSMITTED IN ANY FORM OR BY ANY MEANS, ELECTRONIC OR MECHANICAL, FOR ANY PURPOSES WITHOUT THE EXPRESS WRITTEN PERMISSION OF NETWORK TECHNOLOGIES, INC.
NT JOB NO. 09-1540

Rabun Rasche Rector Reece
ARCHITECTS
44 Broad Street NW, Suite 300
Atlanta, Georgia 30303
P 404-522-9455 F 404-522-9454

This drawing is the property of Rabun Rasche Rector Reece Architects and may not be reproduced or copied in whole or in part. It is to be used for the Project and Site specifically identified herein and is not to be used on any other project. It is to be returned upon request. Scale as stated hereon are valid on the original drawing, the size of which is 20 inches high by 42 inches long.

DOUGLASVILLE CONFERENCE CENTER
DOUGLASVILLE, GEORGIA

REVIS.	DATE	REMARKS	REVIS.	DATE	REMARKS	REVIS.	DATE	REMARKS	REVIS.	DATE	REMARKS
	03/09/10	FIRE MARSHAL									
	05/14/10	PERMIT SET									
	07/16/10	BID SET									

SHEET TITLE
PROGRAMMING SHEET A AV SYSTEMS

PROJECT NUMBER 722
DATE 03/09/10
SHEET NUMBER AV-5-01

RELEASED FOR CONSTRUCTION

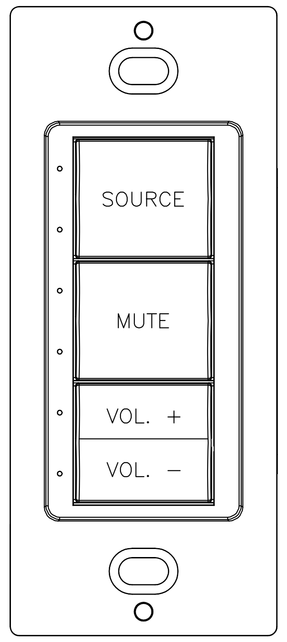

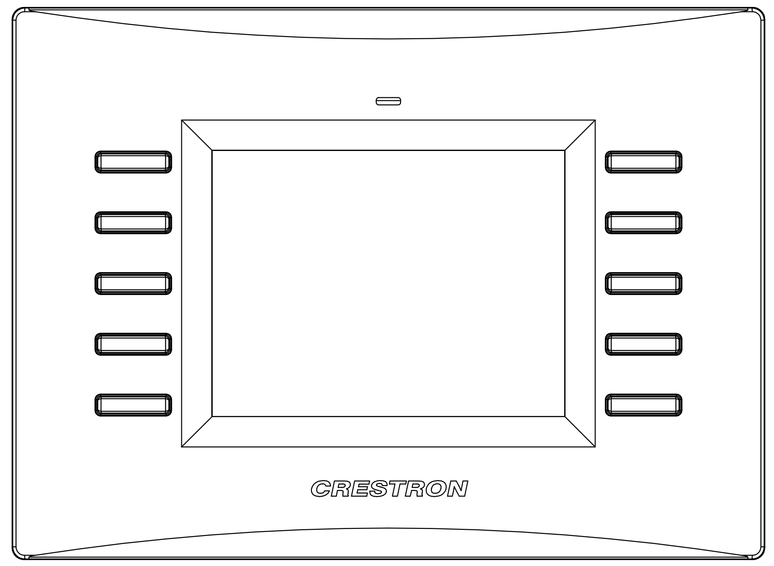

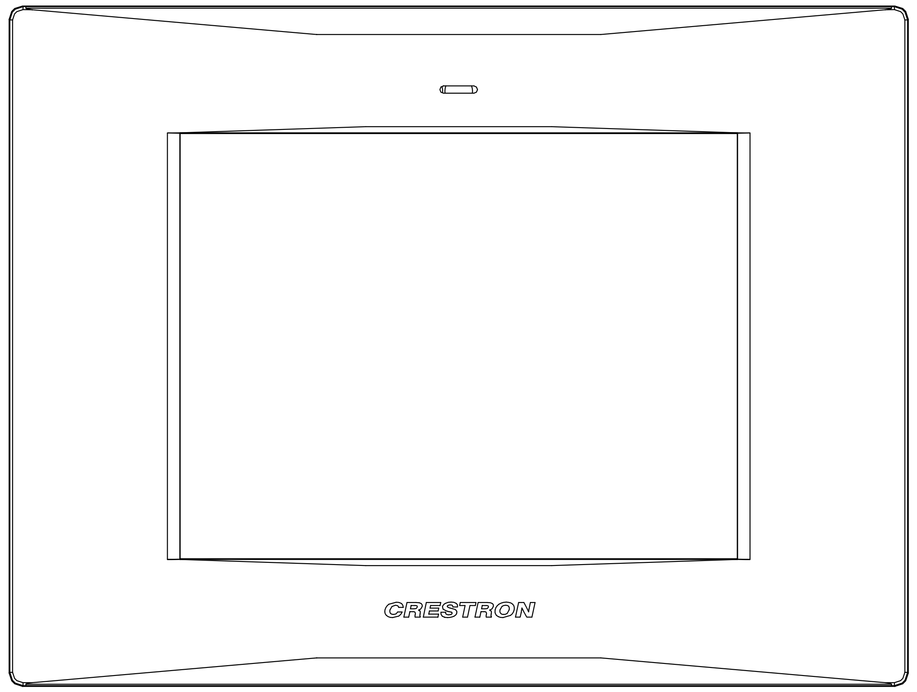

1 AV-501 CRESTRON CN-CBD-(XX) KP.1a

NOT TO SCALE

PROGRAMMING NOTES:

1) SOURCE SELECT WILL CHOSE BETWEEN THE OPTIONAL SOURCES PROVIDED BY THE OWNERSHIP. VERIFY WITH THE OWNERSHIP WHAT SOURCES SHOULD BE SELECTABLE IN THE SPACE.

2) VOLUME + = VOLUME UP FOR THE SOURCE SELECTED

3) VOLUME - = VOLUME DOWN FOR THE SOURCE SELECTED

4) MUTE IS FOR THE SOURCE SELECTED.

5) THE SYSTEM WILL BE CONFIGURED SO THAT MAX VOLUME IS LIMITED TO A COMFORTABLE LEVEL FOR THE SPACE AND MINIMAL VOLUME WILL BE DISTINGUISHABLE FROM MUTE.

6) MUTE WILL FLASH WHEN SELECTED.

2 AV-501 CRESTRON TPS-4L TP.2x

NOT TO SCALE

PROGRAMMING NOTES:

1) THESE WILL BE PASSWORD PROTECTED TO PREVENT UN-AUTHORIZED USE OF THE TOUCH PANEL UNITS.

2) MICROPHONES AND AV SOURCES WILL BE SELECTABLE FROM THESE PANELS.

3) MUTE WILL FLASH WHEN USED

4) VOLUME CONTROLS WILL BE ON THE RIGHT HAND SIDE OF THE UNIT.

MEETING ROOMS:

1) POWER ON WILL TURN ON THE DISPLAY AND SET IT FOR THE HDMI INPUT.

2) POWER OFF WILL TURN THE DISPLAY UNIT OFF.

3) THE SYSTEM SHOULD BE CONFIGURED SO THAT THE AUDIO CAN PLAY WITHOUT THE DISPLAY BEING TURNED ON.

4) THE FACE PLATE SHOULD BE SELECTABLE FROM THE TOUCH PANEL AS WELL AS THE SOURCE FROM EACH FACE PLATE.

5) THE AUDIO CAN BE SEPARATED FROM THE VIDEO FOR GREATER FLEXIBILITY IN THE ROOM OPERATIONS.

6) CATV MAY BE RUN TO THE SET. VERIFY WITH THE OWNERSHIP THAT CHANGING THE CHANNELS ON THE DISPLAYS IS DESIRABLE. THIS IS AN OPTIONAL FEATURE.

BALLROOM:

1) POWER ON WILL LOWER THE PROJECTOR, LOWER THE SCREEN, TURN ON THE PROJECTOR, AND SET THE PROJECTOR INPUT TO THE HDMI PORT.

2) POWER OFF WILL RAISE THE SCREEN, TURN OFF THE PROJECTOR. LEAVE THE LIFT LOWERED UNTIL THE PROJECTOR HAS COOLED AND TURNED OFF ITS FAN. UPON COOLING IT WILL RAISE THE LIFT. A MESSAGE WILL APPEAR ON THE SCREEN DURING POWER DOWN TO INDICATE THE COOLING PROCESS IS TAKING PLACE.

3) SEE NOTES 3, 4, AND 5 FROM THE MEETING ROOM NOTES.

4) SEE KP.1a FOR ROOM COMBINING INFORMATION.

3 AV-501 CRESTRON TPS-6L TP.1x

NOT TO SCALE

PROGRAMMING NOTES:

1) ALL ROOM CONFIGURATIONS WILL OCCUR ON THIS TOUCH PANEL.

2) THE PUBLIC SPACE SOURCE AND VOLUME LEVEL WILL BE SET FROM THIS LOCATION

3) THIS UNIT WILL CONTROL THE DIVIDE/ COMBINE OPTIONS IN THE BALLROOM, AS WELL AS THE OVERFLOW OPTIONS TO THE MEETING SPACES.

MEETING ROOM:

1) THESE ROOMS WILL BE STAND ALONE BY DEFAULT.

2) EACH ROOM CAN ACT AS AN OVERFLOW ROOM WITH SHARED AUDIO AND VIDEO.

3) THE ROOMS CAN ALSO BE AND OVERFLOW LOCATION FROM THE BALLROOM.

BALLROOM:

1) THESE ROOMS WILL BE SEPARATED BY DEFAULT.

2) WHEN THE ROOMS ARE SEPARATED THE HEAD TABLE LOCATIONS WILL BE ADJUSTED JUST WITH THE OVERHEAD SPEAKERS IN THE ROOM.

3) WHEN THE ROOMS ARE COMBINED THE HEAD TABLE LOCATIONS WILL USE SPEAKERS GROUPED APPROPRIATELY FOR THE HEAD TABLE LOCATION

BLU-RAY PLAYER

1) BLU-RAY PLAYER HAS RS-232 CONTROL SO POWER SHALL BE A SEPARATE ON AND OFF.

2) FULL MENU AND PLAY FEATURES SHOULD BE ACCESSIBLE EXCEPT FOR SET-UP FEATURES WHICH SHOULD BE SET FOR OPTIMUM OUTPUT DURING INSTALLATION

3) .BLU-RAY UNIT SHOULD BE CONFIGURED TO PLAY AS CD AUDIO SOURCE AS WELL AS DVD & BLU-RAY FULL PLAYBACK SOURCE.

4) AUTO REPEAT SHOULD BE ABLE TO BE ENGAGED IF POSSIBLE.

5) BLU-RAY SIGNAL CAN BE ROUTED TO ANY AUDIO OR VIDEO PLAYBACK LOCATION IN THE FACILITY.

.

4 AV-501 PROGRAMMING GENERAL NOTES:

NOT TO SCALE

GENERAL NOTE:

1) COORDINATE FACE PLATE COVERS AND KEYPAD COLORS WITH THE ID REQUIREMENTS FOR THE PROJECT.

2) THE TOUCH PANEL LAYOUTS SHOULD BE SUBMITTED TO THE CONSULTANT AND THE OWNERSHIP FOR APPROVAL PRIOR TO FINAL INSTALLATION.

3) ALL TOUCH PANELS SHALL GO INTO REST MODE WITH A LOGO OR SIGN.

5 AV-501 CRESTRON ADDITIONAL PROGRAMMING

NOT TO SCALE

PRICE AS AN ADD ALTERNATE - CRESTRON ROOMVIEW SERVER EDITION

PROGRAMMING NOTES:

1) MONITOR ALL ROOM TECHNOLOGY AND OPERATIONS.

2) MONITOR ALL EQUIPMENT IN ROOMS INCLUDING SERIAL NUMBERS, PURCHASE DATES, WARRANTY INFORMATION, AND SERVICE SCHEDULES.

3) HELP DESK SUPPORT WITH ROOM OVERRIDE.

4) MEETING ROOM AND TECHNOLOGY SCHEDULING.

5) STAFF NOTIFICATIONS BASED ON ROOM SCHEDULE.

PRICE AS AN ADD ALTERNATE - INTERFACING WITH THE LIGHTING SYSTEMS CONTROL

PROGRAMMING NOTES:

1) THIS WILL BE HITTING THE LIGHTING PRESETS IN THE MEETING AND BALLROOMS FROM THE TOUCH PANELS LOCATED IN EACH SPACE.

2) THE INTERFACE WILL BE VIA ETHERNET TO THE LIGHTING CONTROL SYSTEM.

3) COORDINATE THE CONTROL OF THE LIGHTING WITH THE LIGHTING DESIGNER.

PRICE AS AN ADD ALTERNATE - DIGITAL SIGNAGE SYSTEM

PROGRAMMING NOTES:

1) INTERFACE CRESTRON TPMC-4SM UNITS OUTSIDE OF THE MEETING AND BALLROOM SPACES WITH ROOMVIEW SCHEDULING.

2) UNITS WILL CHANGE COLORS TO INDICATE ROOMS OCCUPANCY AND VACANCY

3) ROOM SCHEDULE OVERRIDE, REVIEW, AND CURRENT STATUS WILL BE VIEWABLE ON EACH SCREEN.

4) ROOM MEETING NAME WILL APPEAR ON SCREEN DURING REST STATE.

5) SCREENS WILL BE PASSWORD PROTECTED WHEN TOUCHED FOR ACTIVATION AND REVIEW.

PROGRAMMING
SHEET B
AV SYSTEMS

nti
network technologies, inc
www.nticonsultants.com
470 NORTH CLAYTON ST. STE 101, LAWRENCEVILLE, GA. 30045
TEL (404) 475-8453 FAX (404) 475-8454

THIS DRAWING IS AN INSTRUMENT OF SERVICE AND, AT SUCH, IS THE PROPERTY OF NETWORK TECHNOLOGIES, INC. (NTI). IT IS TO BE USED ONLY FOR THE PROJECT NAMED HEREIN AND NOT TO BE LOANED OR COPIED. THIS DOCUMENT SHALL BE REPRODUCED OR TRANSMITTED IN ANY FORM OR BY ANY MEANS, ELECTRONIC OR MECHANICAL, WITHOUT THE PERMISSION IN WRITING OR EXPRESS WRITTEN PERMISSION OF NETWORK TECHNOLOGIES, INC.
NTI JOB NO. 09-1540

Rabun Rasche Rector Reece
ARCHITECTS
44 Broad Street NW, Suite 300
Atlanta, Georgia 30303
P 404-522-9455 F 404-522-9454

This drawing is the property of Rabun Rasche Rector Reece Architects and is not to be reproduced or copied in whole or in part. It is to be used for the Project and Site specifically identified herein and is not to be used on any other project. All ideas, returned upon request. Scale as stated hereon are valid on the original drawing, the size of which is 30 inches high by 42 inches long.

DOUGLASVILLE
CONFERENCE CENTER
DOUGLASVILLE, GEORGIA

REVIS.	DATE	REMARKS	REVIS.	DATE	REMARKS	REVIS.	DATE	REMARKS	REVIS.	DATE	REMARKS
	03/09/10	FIRE MARSHAL									
	05/14/10	PERMIT SET									
	07/16/10	BID SET									

SHEET TITLE
PROGRAMMING
SHEET B
AV SYSTEMS

PROJECT NUMBER 722
DATE 03/09/10
SHEET NUMBER AV-5-02

RELEASED FOR CONSTRUCTION

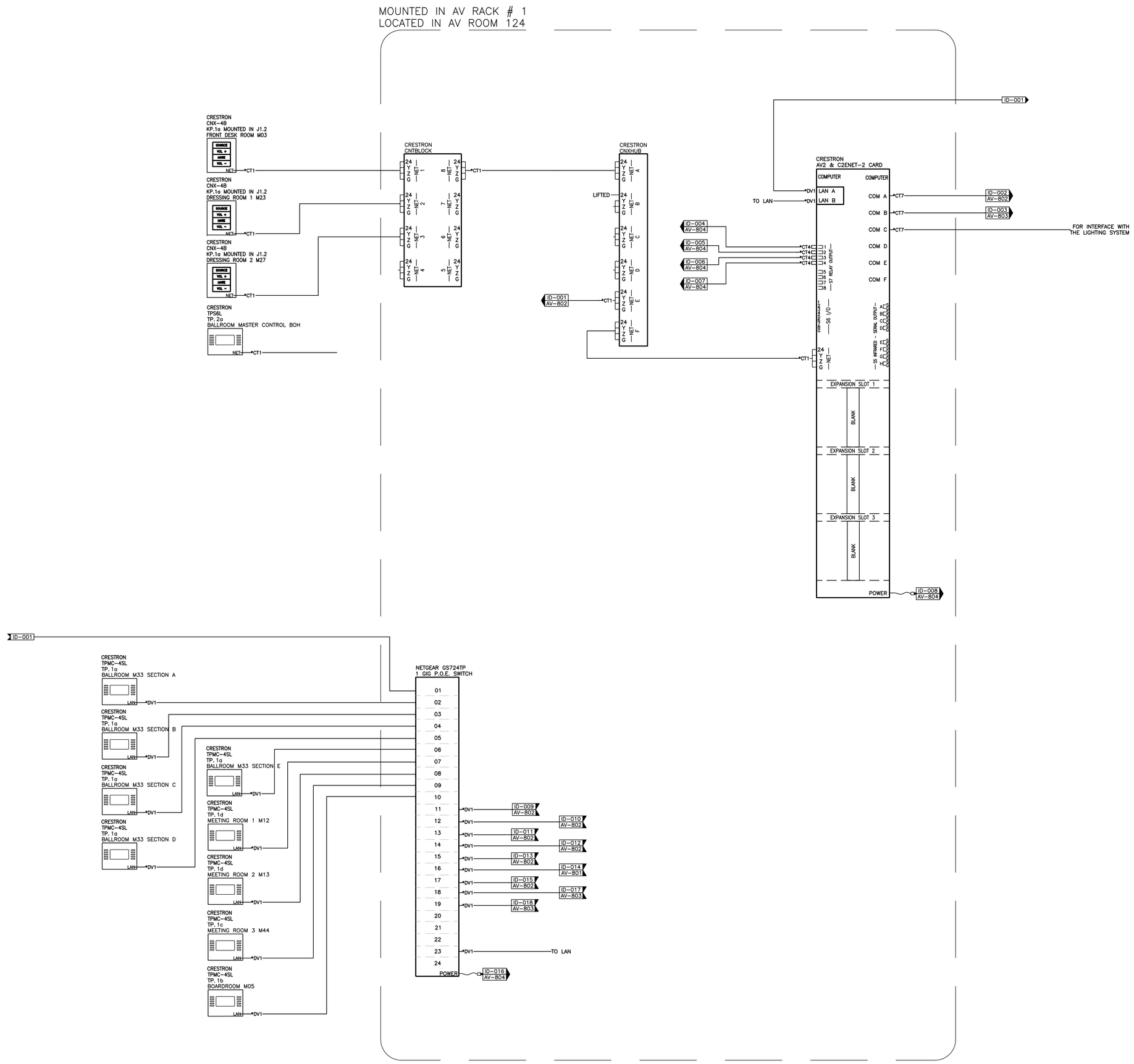

Rabun Rasche Rector Reece
ARCHITECTS
44 Broad Street NW, Suite 300
Atlanta, Georgia 30303
P 404-522-9455 F 404-522-9454

This drawing is the property of Rabun Rasche Rector Reece Architects and is to be returned upon request. It is not to be used in part. It is to be used for the Project and Site specifically identified herein and is not to be used on any other project. It is to be returned upon request. Scale as stated hereon are valid on the original drawing, the size of which is 30 inches high by 42 inches long.

DOUGLASVILLE
CONFERENCE CENTER

DOUGLASVILLE, GEORGIA

REVIS.	DATE	REMARKS	REVIS.	DATE	REMARKS	REVIS.	DATE	REMARKS	REVIS.	DATE	REMARKS
	03/09/10	FIRE MARSHAL									
	05/14/10	PERMIT SET									
	07/16/10	BID SET									

SHEET TITLE

CONNECTION
SHEET A
AV SYSTEMS

PROJECT NUMBER
722

DATE
03/09/10

SHEET NUMBER
AV-8-01

nti
network technologies, inc
www.nticonsultants.com
470 NORTH CLAYTON ST., STE. 202, LAWRENCEVILLE, GA 30045
770.1800.1.TALKNET 1.770.1800.1.TALKNET

THIS DRAWING IS AN INSTRUMENT OF SERVICE AND AS SUCH REMAINS THE PROPERTY OF NETWORK TECHNOLOGIES, INC. IT IS TO BE USED ONLY FOR THE PROJECT AND SITE SPECIFICALLY IDENTIFIED HEREIN AND THIS DOCUMENT SHALL BE REPRODUCED OR TRANSMITTED IN ANY FORM OR BY ANY MEANS, ELECTRONIC OR MECHANICAL, FOR ANY PURPOSES WITHOUT THE EXPRESS WRITTEN PERMISSION OF NETWORK TECHNOLOGIES, INC.
NT JOB NO. 09-1564

RELEASED FOR CONSTRUCTION

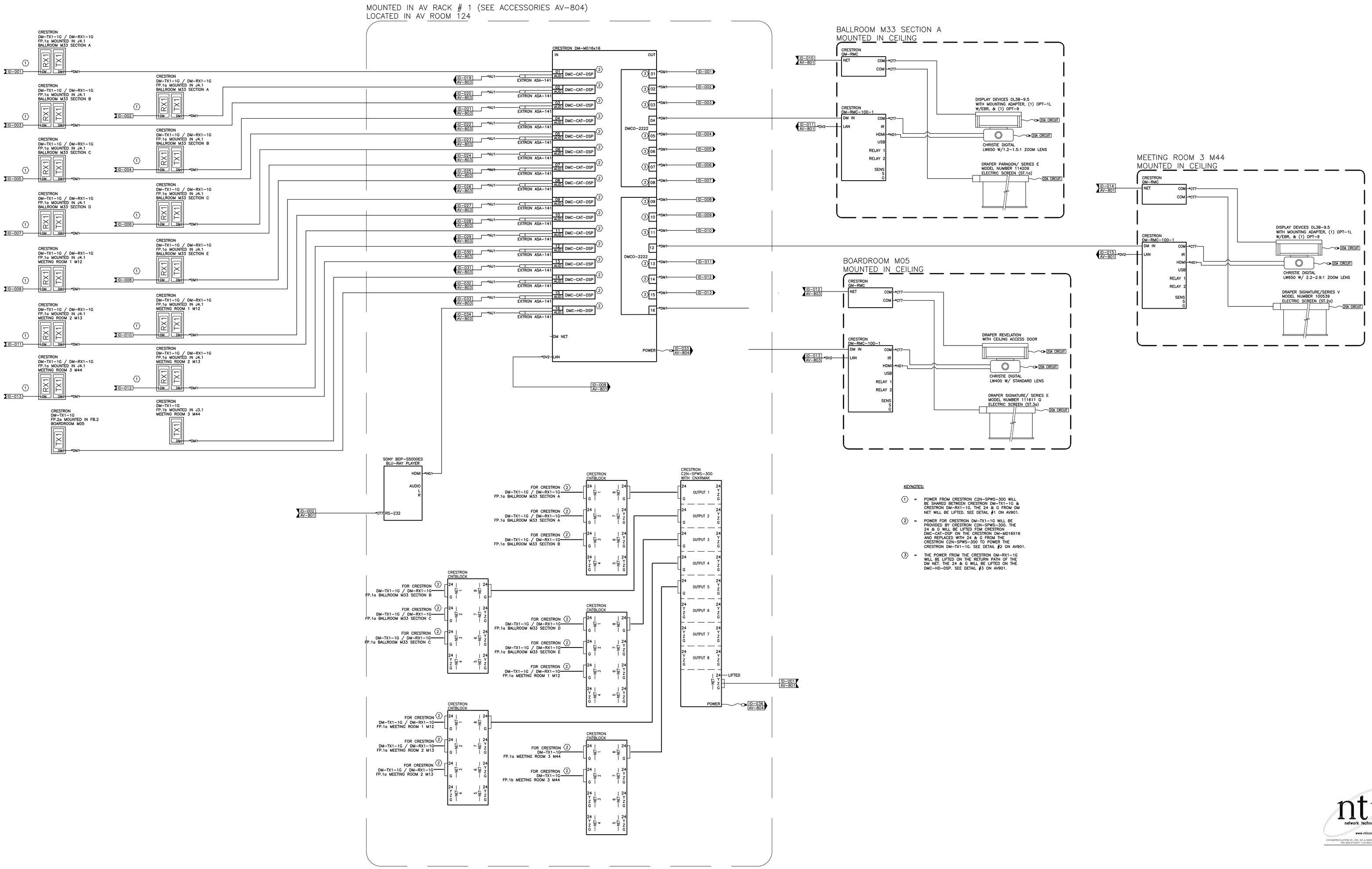

KEYNOTES:

1. = POWER FROM CRESTRON C2N-SPWS-300 WILL BE SHARED BETWEEN CRESTRON DM-TX1-1G & CRESTRON DM-RX1-1G. THE 24 & G FROM DM NET WILL BE LIFTED. SEE DETAIL #1 ON AV901.

2. = POWER FOR CRESTRON DM-TX1-1G WILL BE PROVIDED BY CRESTRON C2N-SPWS-300. THE 24 & G WILL BE LIFTED FOM CRESTRON DMC-CAT-DSP ON THE CRESTRON DM-MD16X16 AND THE 24 & G WILL BE LIFTED ON THE CRESTRON C2N-SPWS-300 TO POWER THE CRESTRON DM-TX1-1G. SEE DETAIL #2 ON AV901.

3. = THE POWER FROM THE CRESTRON DM-RX1-1G WILL BE LIFTED ON THE RETURN PATH OF THE DM NET. THE 24 & G WILL BE LIFTED ON THE DMC-HD-DSP. SEE DETAIL #3 ON AV901.

nti
network technologies, inc
www.nticonsultants.com
470 NORTH CLAYTON ST., STE. 201, LAWRENCEVILLE, GA. 30046
770.339.0202 FAX 770.339.0203 E-CAD 404.276.0200

THIS DRAWING IS AN INSTRUMENT OF SERVICE AND, AT SUCH, IS THE PROPERTY OF NETWORK TECHNOLOGIES, INC. (NTI). THE DESIGN, IDEAS, AND PLANS REPRESENTED AND SITE SPECIFICALLY ADAPTED DESIGN, AS PART OF THIS DOCUMENT SHALL BE REPRODUCED OR TRANSMITTED IN ANY FORM OR BY ANY MEANS, ELECTRONIC OR MECHANICAL, FOR ANY PURPOSES WITHOUT THE EXPRESS WRITTEN PERMISSION OF NETWORK TECHNOLOGIES, INC.
NT JOB NO. 09-1540

RELEASED FOR CONSTRUCTION

Rabun Rasche Rector Reece
ARCHITECTS
44 Broad Street NW, Suite 300
Atlanta, Georgia 30303
P 404-522-9455 F 404-522-9454

This drawing is the property of Rabun Rasche Rector Reece and may not be used or reproduced or copied in whole or in part. It is to be used for the Project and Site specifically identified herein and for no other purpose or other project. It is to be returned upon request. Scale as stated hereon are valid on the original drawing, the size of which is 30 inches high by 42 inches long.

DOUGLASVILLE
CONFERENCE CENTER

DOUGLASVILLE, GEORGIA

REVIS.	DATE	REMARKS
	03/09/10	FIRE MARSHAL
	05/14/10	PERMIT SET
	07/16/10	BID SET

SHEET TITLE

CONNECTION
SHEET B
AV SYSTEMS

PROJECT NUMBER 722

DATE 03/09/10

SHEET NUMBER AV-8-02

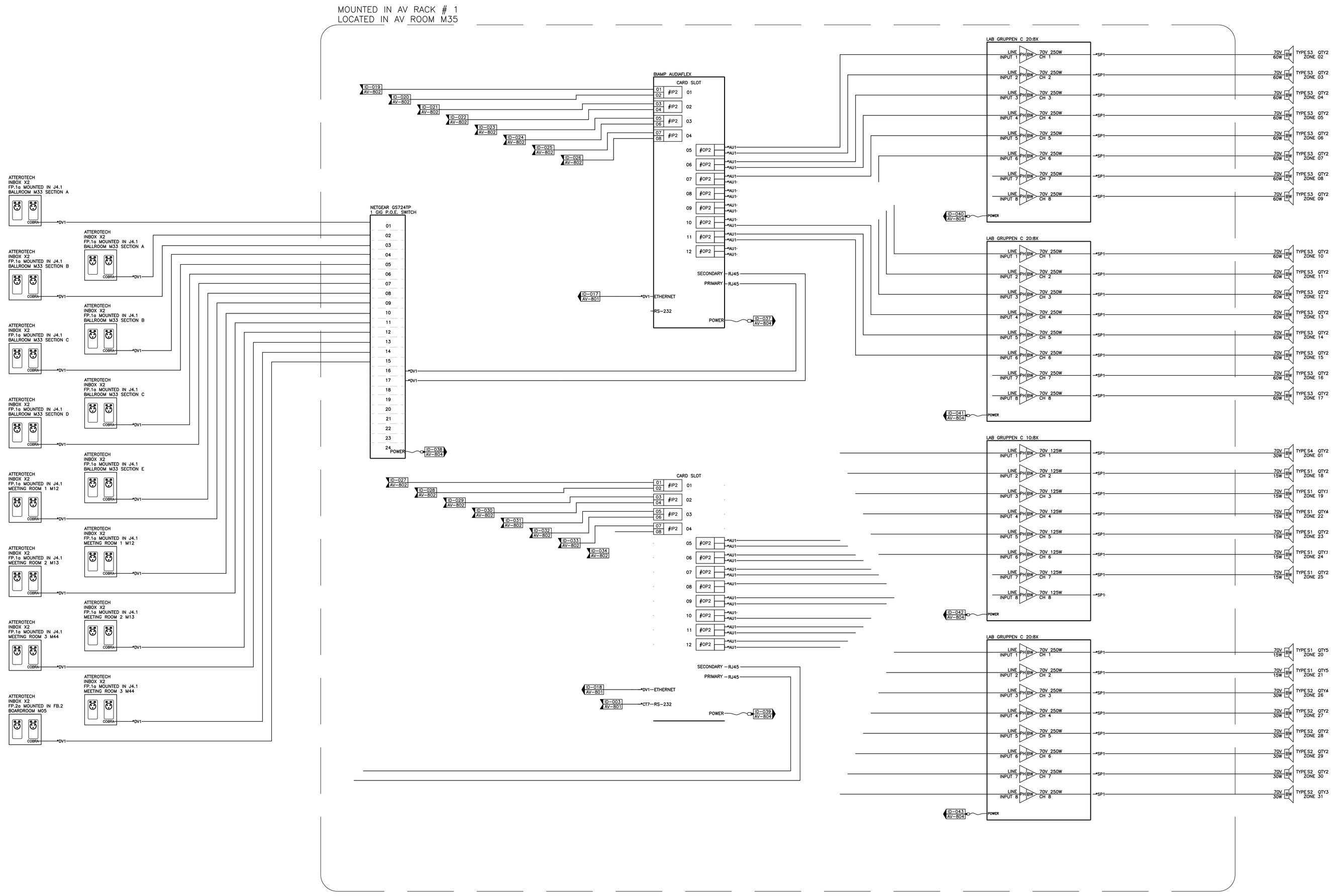

Rabun Rasche Rector Reece
ARCHITECTS
44 Broad Street NW, Suite 300
Atlanta, Georgia 30303
P 404-522-9455 F 404-522-9454

This drawing is the property of Rabun Rasche Rector Reece Architects and is not to be reproduced or used in whole or in part. It is to be used for the Project and Site specifically identified herein and is not to be used on any other project. It is to be returned upon request. Scale as stated hereon are valid on the original drawing, the size of which is 30 inches high by 42 inches long.

DOUGLASVILLE
CONFERENCE CENTER

DOUGLASVILLE, GEORGIA

REVIS.	DATE	REMARKS	REVIS.	DATE	REMARKS	REVIS.	DATE	REMARKS	REVIS.	DATE	REMARKS
	03/09/10	FIRE MARSHAL									
	05/14/10	PERMIT SET									
	07/16/10	BID SET									

SHEET TITLE

CONNECTION
SHEET C
AV SYSTEMS

PROJECT NUMBER
722

DATE
03/09/10

SHEET NUMBER
AV-8-03

nti
network technologies, inc
www.nticonsultants.com
470 NORTH CLEVELAND ST. STE 101 LAWRENCEVILLE, GA 30046
TEL 1.800.874.8472 FAX 1.404.374.8474

THIS DRAWING IS AN INSTRUMENT OF SERVICE AND, AS SUCH, IS THE PROPERTY OF NETWORK TECHNOLOGIES, INC. (NTI). IT IS TO BE USED ONLY FOR THE PROJECT AND IN THE PERFORMANCE OF THE WORK OF NTI. NO PART OF THIS DOCUMENT SHALL BE REPRODUCED OR TRANSMITTED IN ANY FORM OR BY ANY MEANS, ELECTRONIC OR MECHANICAL, INCLUDING PHOTOCOPYING, WITHOUT THE EXPRESS WRITTEN PERMISSION OF NETWORK TECHNOLOGIES, INC.
NTI JOB NO. 09-1940

RELEASED FOR CONSTRUCTION

MOUNTED IN AV RACK #1
LOCATED IN AV RACK ROOM 124

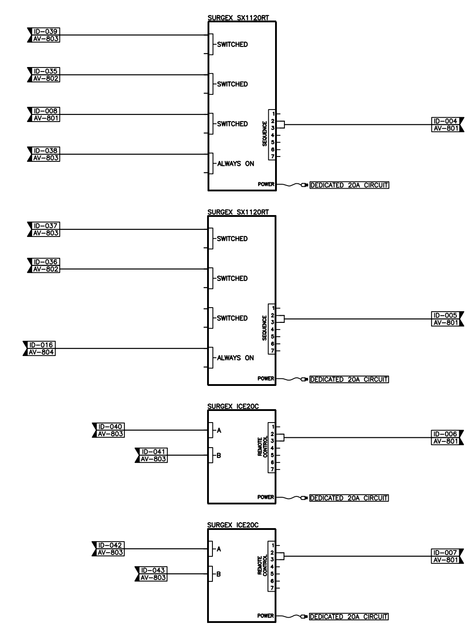

PROVIDE WITH SYSTEMS AS PART OF THE BASE PACKAGE:

AV CART SYSTEM:
THIS IS TO PROVIDE A PORTABLE CART SYSTEM FOR USE IN ROOMS OR CONFIGURATIONS NOT ALREADY COVERED BY BUILT-IN AV SYSTEMS.

QTY	MODEL	
1	DA-LITE APT2-42 CART WITH APT2-LS SHELF & APT-C LOCKING CABINET.	
1	BENQ SP-920P PROJECTOR.	
1	6 OUTLET 20AMP POWER STRIP WITH 6' CORD.	
1	CABLE(S) OF EACH OF THE FOLLOWING:	
	HIGH SPEED HDMI	25' LENGTH
	VGA CABLE W/AUDIO	25' LENGTH
	S-VIDEO CABLE	25' LENGTH
	COMPOSITE CABLE	25' LENGTH
	2 CH AUDIO CABLE	25' LENGTH
1	DRAPER 218195 PORTABLE SCREEN	

PRICE AS AN ADD ALTERNATE FOR THE SCREEN A DRAPE KIT TO SURROUND THE SCREEN.

ACCESSORIES:
THE TV-ONE UNITS WILL BE FOR USE WITH ANALOG EQUIPMENT THAT NEEDS TO BE INPUTED INTO THE DIGITAL WALL PLATES LOCATED THROUGH OUT THE SPACES.
THE MICROPHONE OPTIONS ARE FOR FLEXABILITY IN OPERATIONS FOR VARIOUS USE REQUIREMENTS.
BE SURE TO INCLUDE BATTERIES FOR ALL WIRELESS DEVICES. BATTERIES SHOULD BE SUFFICIENT FOR 1 MONTHS USAGE OF THE WIRELESS SYSTEMS.

QTY	MODEL	
4	TV-ONE 1T-VS-658 CONVERTERS	
4	CABLE(S) OF EACH OF THE FOLLOWING:	
	HIGH SPEED HDMI	25' LENGTH
	VGA CABLE W/AUDIO	25' LENGTH
	S-VIDEO CABLE	25' LENGTH
	COMPOSITE CABLE	25' LENGTH
	2 CH AUDIO CABLE	25' LENGTH
2	SHURE PG1288/PG185 VOCAL/LAVALIER COMBO WIRELESS MICROPHONE SYSTEM WITH 25' XLR CABLE	
8	SHURE SM-58 HANDHELD MICROPHONE WITH 25' MICROPHONE CABLE	
2	SHURE SM-57 HANDHELD MICROPHONE WITH 25' MICROPHONE CABLE	
2	SHURE MX-410/S PODIUM MICROPHONES WITH MX400DP TABLE TOP STAND AND 25' MICROPHONE CABLE	
4	FLOOR STANDING MICROPHONE STANDS	
4	TABLE TOP MICROPHONE STANDS	
8	MICROPHONE CLIPS FOR BOTH HANDHELD STANDARD AND WIRELESS SIZES.	

RACK ENCLOSURE:

QTY	MODEL
1	MIDDLE ATLANTIC WRK-44SA-32 RACK
1	MIDDLE ATLANTIC CBS-WRK-32 WHEEL BASE
1	MIDDLE ATLANTIC VFD-44 VENTED FRONT DOOR
1	MIDDLE ATLANTIC VBK-WSA-32 VENT BLOCK KIT
1	MIDDLE ATLANTIC MW-6FT-660CFM FAN KIT WITH OPTIONAL FAN CONTROL
1	MIDDLE ATLANTIC 2U RACK SHELF
1	MIDDLE ATLANTIC CUSTOM RACK SHELF FOR SONY BDP-S5000ES BLU-RAY PLAYER
X	MISC BLANK SOLID 1U RACK COVERS
X	MISC RACK SCREWS & ACCESSORIES

nti
network technologies, inc
www.nticonsultants.com
470 NORTH CLAYTON ST., STE. 201, LAWRENCEVILLE, GA. 30045
770-963-8660 FAX 770-963-8661 TOLL FREE 800-748-8660

THIS DRAWING IS AN INSTRUMENT OF SERVICE AND, AS SUCH, IS THE PROPERTY OF NETWORK TECHNOLOGIES, INC. THE DESIGN, INFORMATION, IDEAS, AND STYLE ARE THE INTELLECTUAL PROPERTY OF NETWORK TECHNOLOGIES, INC. AND ARE NOT TO BE DUPLICATED, REPRODUCED, OR USED IN ANY FORM OR BY ANY MEANS, ELECTRONIC OR MECHANICAL, WITHOUT THE EXPRESS WRITTEN PERMISSION OF NETWORK TECHNOLOGIES, INC.
NTI JOB NO. 09-1945

Rabun Rasche Rector Reece
ARCHITECTS
44 Broad Street NW, Suite 300
Atlanta, Georgia 30303
P 404-522-9455 F 404-522-9454

This drawing is the property of Rabun Rasche Rector Reece Architects and is not to be reproduced or copied in whole or in part. It is to be used only for the project and at the specifically identified herein and is not to be used on any other project. It is to be returned upon request. Scale: Unless otherwise noted on the original drawing, the size of which is 30 inches high by 42 inches long.

DOUGLASVILLE
CONFERENCE CENTER

DOUGLASVILLE, GEORGIA

REVIS.	DATE	REMARKS
	03/09/10	FIRE MARSHAL
	05/14/10	PERMIT SET
	07/16/10	BID SET

SHEET TITLE
CONNECTION
SHEET D
AV SYSTEMS

PROJECT NUMBER 722
DATE 03/09/10
SHEET NUMBER AV-8-04

RELEASED FOR CONSTRUCTION

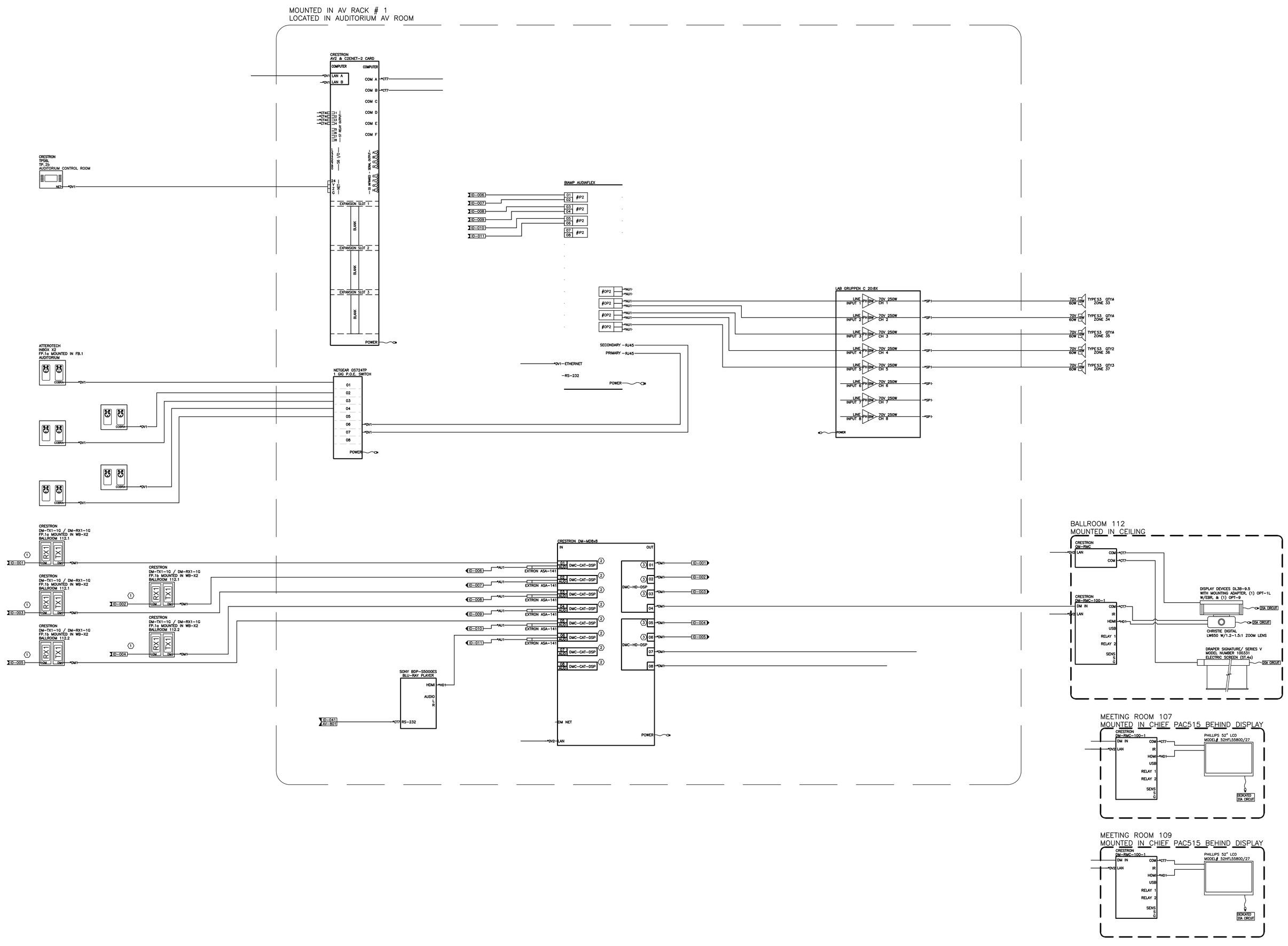

nti
network technologies, inc
www.nticonsultants.com

THIS DRAWING IS AN INSTRUMENT OF SERVICE AND, AS SUCH, IS THE PROPERTY OF NETWORK TECHNOLOGIES, INC. DATE IF IS TO BE USED ONLY FOR THE PROJECT AND SITE SPECIFICALLY IDENTIFIED HEREIN. NO PART OF THIS DOCUMENT SHALL BE REPRODUCED OR TRANSMITTED IN ANY FORM OR BY ANY MEANS, ELECTRONIC OR MECHANICAL, FOR ANY PURPOSE, WITHOUT THE EXPRESS WRITTEN PERMISSION OF NETWORK TECHNOLOGIES, INC.

Rabun Rasche Rector Reece
ARCHITECTS
44 Broad Street NW, Suite 300
Atlanta, Georgia 30303
P 404-522-9455 F 404-522-9454

This drawing is the property of Rabun Rasche Rector Reece Architects and is not to be reproduced or copied in whole or in part. It is to be used for the Project and Site specifically identified herein and is not to be used on any other project. It is to be returned upon request. Scale as stated herein are valid on the original drawing, the size of which is 30 inches high by 42 inches long.

DOUGLASVILLE
CONFERENCE CENTER
DOUGLASVILLE, GEORGIA

REVIS.	DATE	REMARKS	REVIS.	DATE	REMARKS	REVIS.	DATE	REMARKS	REVIS.	DATE	REMARKS
	03/09/10	FIRE MARSHAL									
	05/14/10	PERMIT SET									
	07/16/10	BID SET									

SHEET TITLE
CONNECTION
SHEET E
AV SYSTEMS

PROJECT NUMBER
722

DATE
03/09/10

SHEET NUMBER
AV-8-05

RELEASED FOR CONSTRUCTION

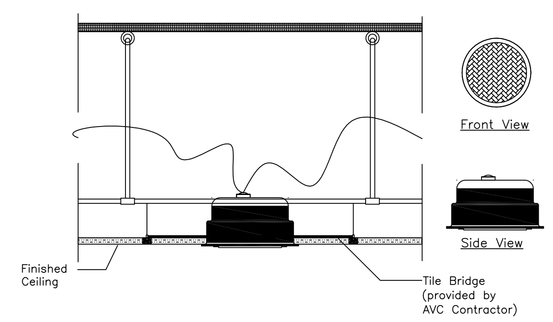

1 STANDARD CEILING SPEAKER
AV-9.00 NOT TO SCALE

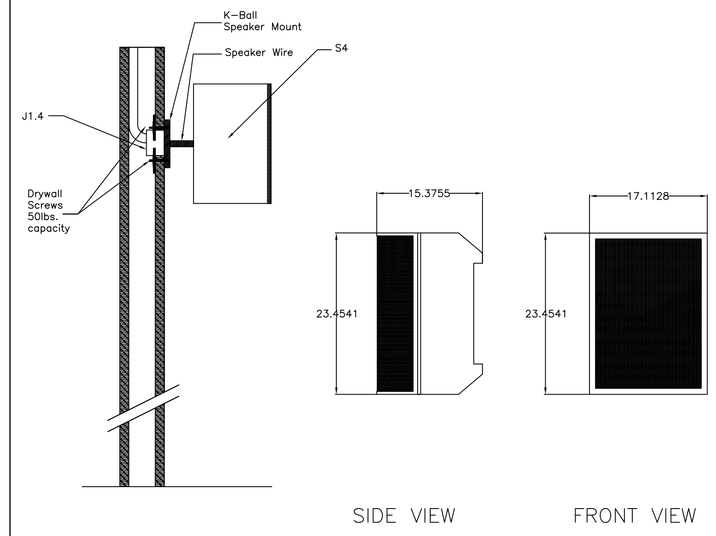

2 STANDARD WALL MOUNT SPEAKER
AV-9.00 NOT TO SCALE

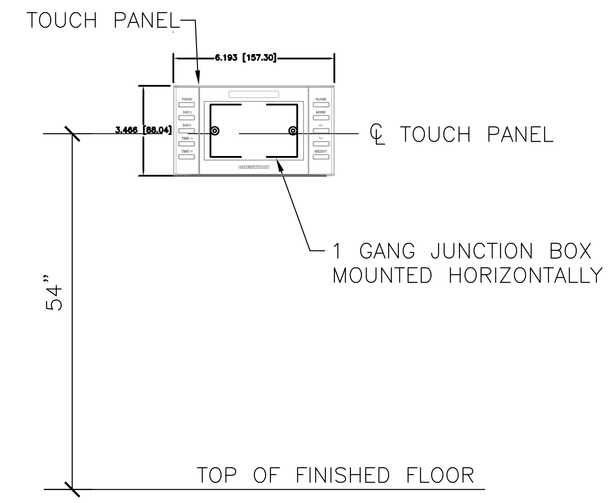

3 CRESTRON TPMC-4SM TOUCH PANEL WALL MOUNT DETAIL
AV-9.00 NOT TO SCALE

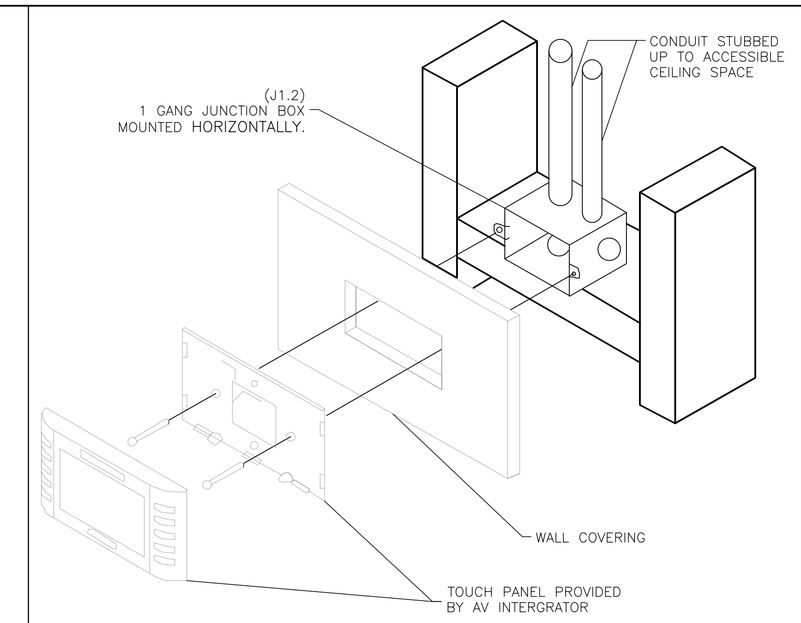

4 J1.2 JUNCTION BOX MOUNTING DETAIL
AV-9.00 NOT TO SCALE

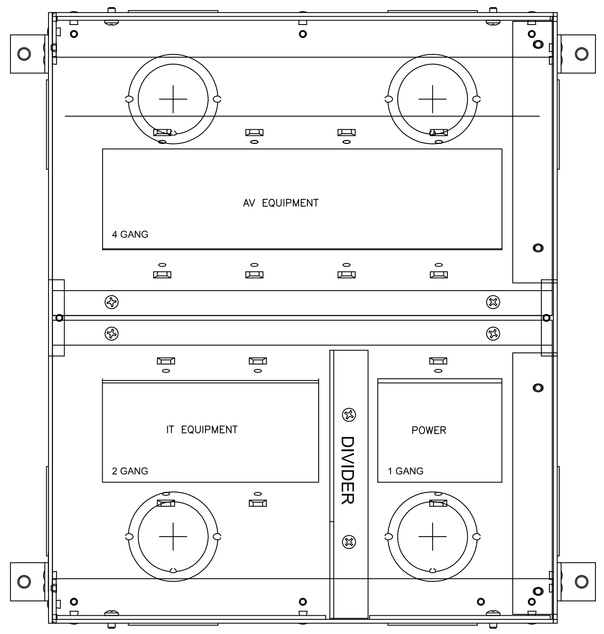

5 (FB.1) FSR-500 FLOOR BOX LAYOUT
AV-9.00 NOT TO SCALE

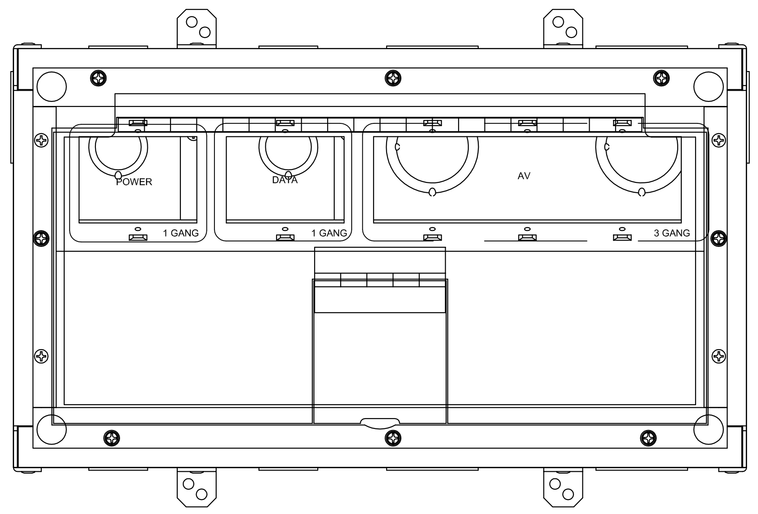

6 (FB.2) FSR-700 FLOOR BOX LAYOUT
9.00 NOT TO SCALE

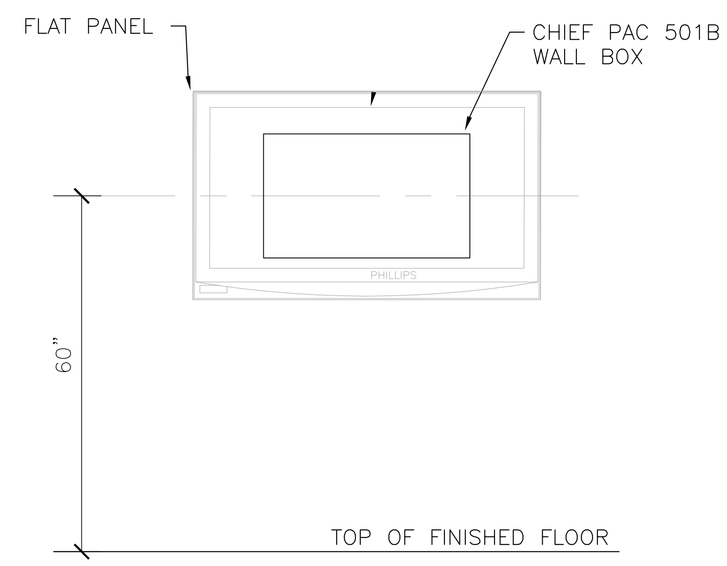

7 WB.1 AND FLAT PANEL DETAIL
9.00 NOT TO SCALE

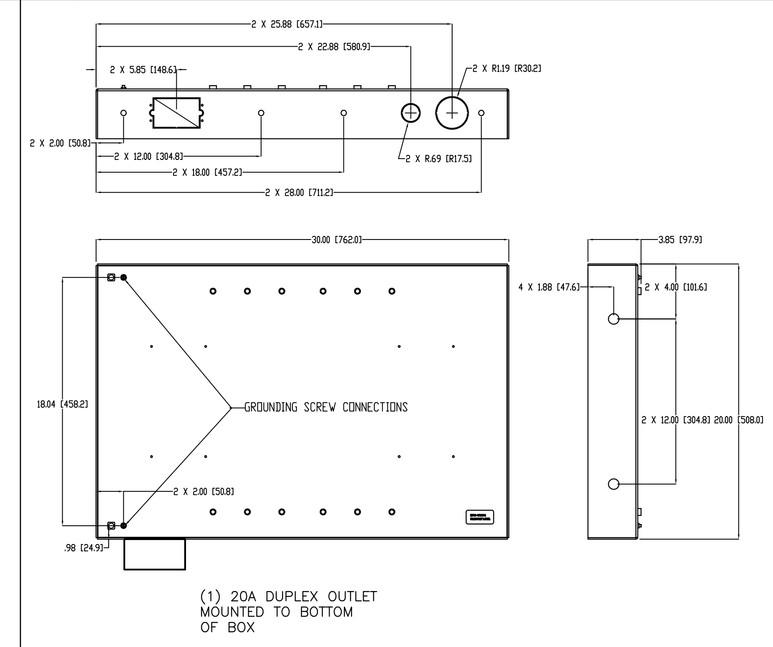

8 CHIEF PAC501B IN WALL SWING ARM ACCESSORY (WB.1)
AV-9.00 NOT TO SCALE

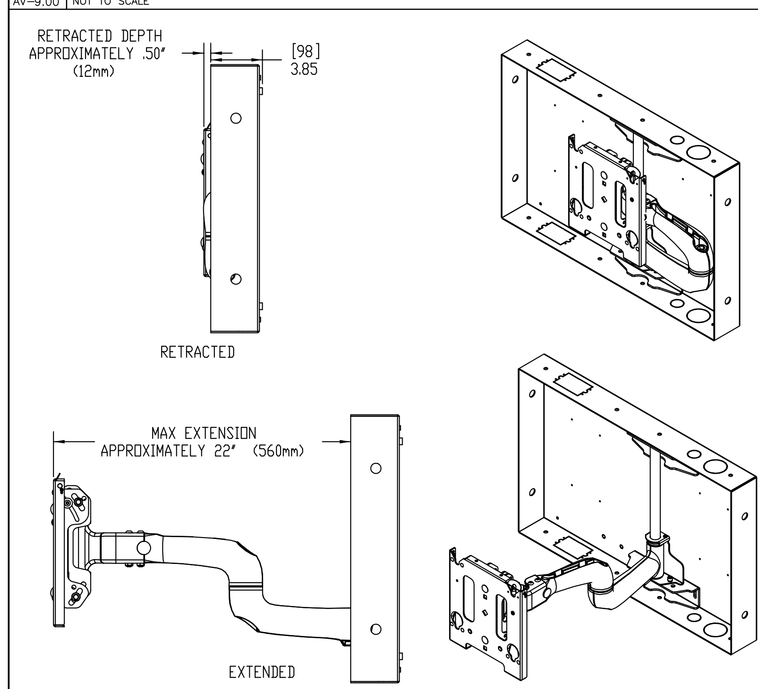

9 CHIEF MWRIWUB SERIES IN WALL SWING ARM MOUNT (WB.1)
AV-9.00 NOT TO SCALE

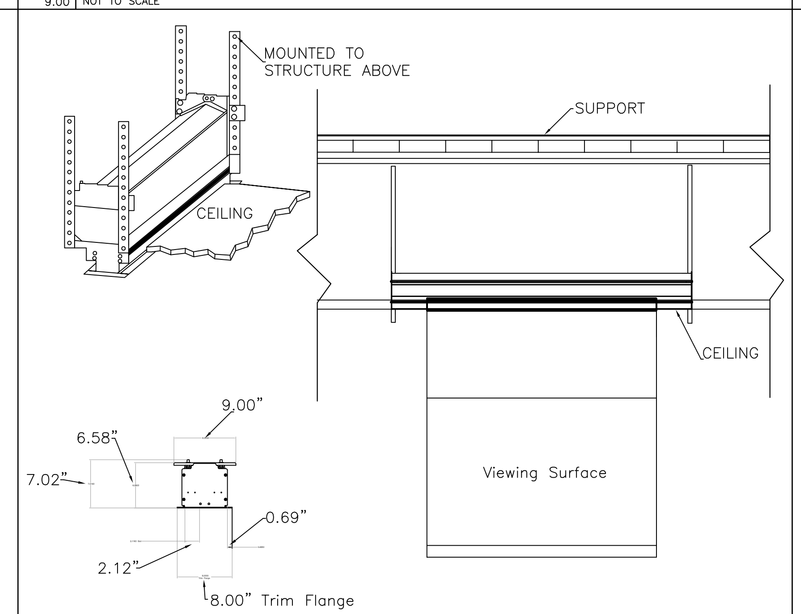

GENERAL GUIDELINE ONLY. FOLLOW THE MANUFACTURES INSTALLATION REQUIREMENTS FOR ALL SCREEN INSTALLATIONS.

10 ELECTRONIC SCREEN DETAIL (SEE LEGEND FOR TYPE AND MODEL)
AV-9.00 NOT TO SCALE

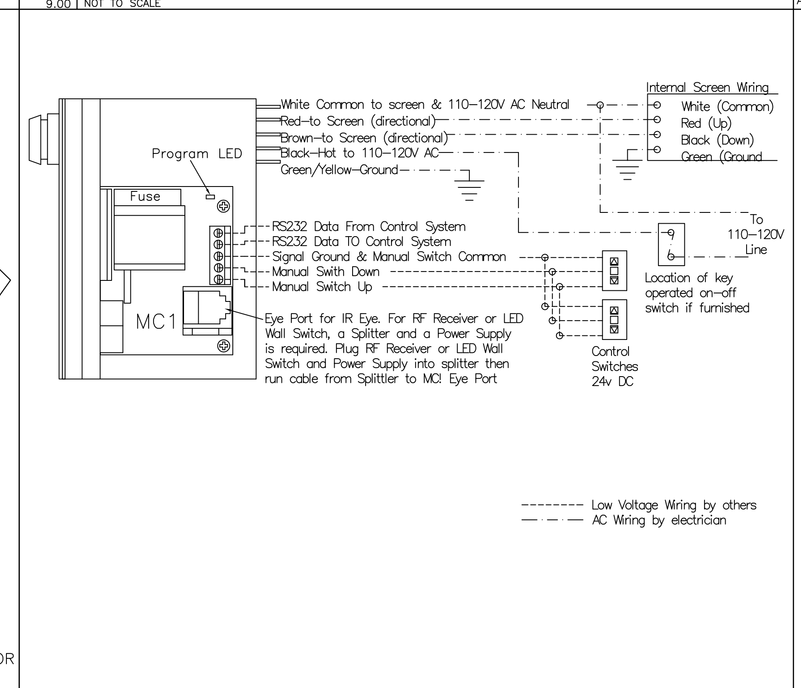

11 DRAPER MC1 - RS232 CONTROL INTERFACE WIRING
AV-9.00 NOT TO SCALE

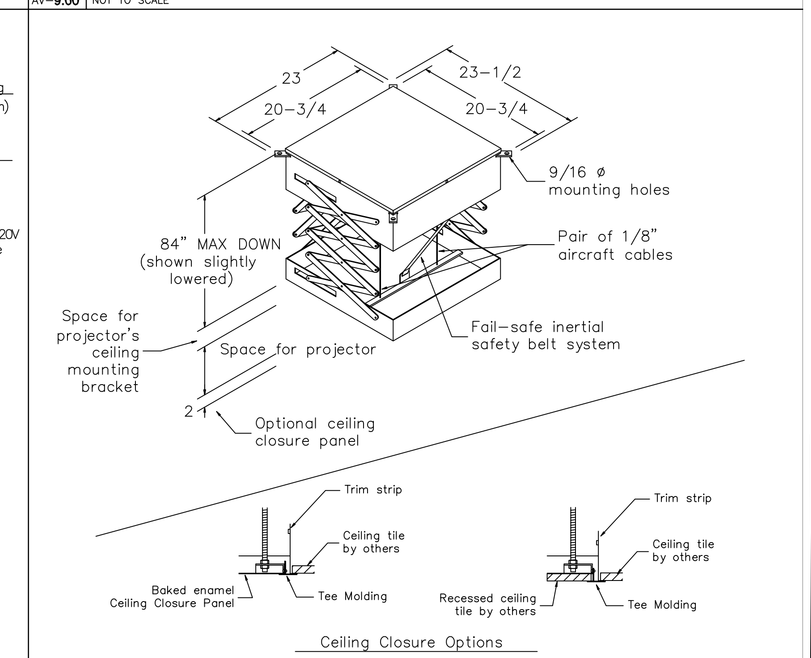

12 SCISSOR PROJECTOR LIFT DETAIL
AV-9.00 NOT TO SCALE

nti network technologies, inc
www.nticonsultants.com
4767 NORTH CLAYTON ST., STE. 201, LAWRENCEVILLE, Ga. 30043
770.339.0202 FAX 770.339.0203 EMAIL info@nticonsultants.com

THIS DRAWING IS AN INSTRUMENT OF SERVICE AND, AS SUCH, IS THE PROPERTY OF NETWORK TECHNOLOGIES, INC. (NTI). THE DESIGN, INFORMATION, DATA, DRAWING AND SITE SPECIFICALLY ADAPTED HEREIN, AS PART OF THE DOCUMENT SHALL BE REPRODUCED OR TRANSMITTED IN WHOLE OR IN PART IN ANY FORM OR BY ANY MEANS, MECHANICAL, FOR ANY PURPOSES WITHOUT THE EXPRESS WRITTEN PERMISSION OF NETWORK TECHNOLOGIES, INC.

Rabun Rasche Rector Reece
ARCHITECTS
44 Broad Street NW, Suite 300
Atlanta, Georgia 30303
P 404-522-9455 F 404-522-9454

This drawing is the property of Rabun Rasche Rector Reece Architects and is not to be reproduced or copied in whole or in part. It is to be used for the Project and Site specifically identified herein and for no other purpose or other project. It is to be returned upon request. Scale as stated hereon are valid on the original drawing, the size of which is 30 inches high by 42 inches long.

DOUGLASVILLE CONFERENCE CENTER

DOUGLASVILLE, GEORGIA

REVIS.	DATE	REMARKS	REVIS.	DATE	REMARKS	REVIS.	DATE	REMARKS	REVIS.	DATE	REMARKS
	03/09/10	FIRE MARSHAL									
	05/14/10	PERMIT SET									
	07/16/10	BID SET									

SHEET TITLE

DETAIL SHEET A
AV SYSTEMS

PROJECT NUMBER
722

DATE
03/09/10

SHEET NUMBER
AV-9-01

RELEASED FOR CONSTRUCTION

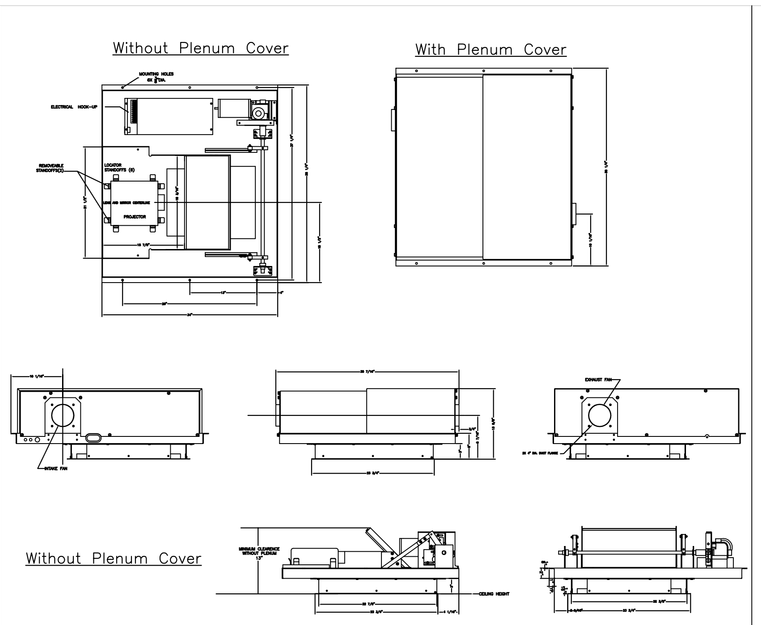

1 DRAPER REVELATION LIFE DETAIL

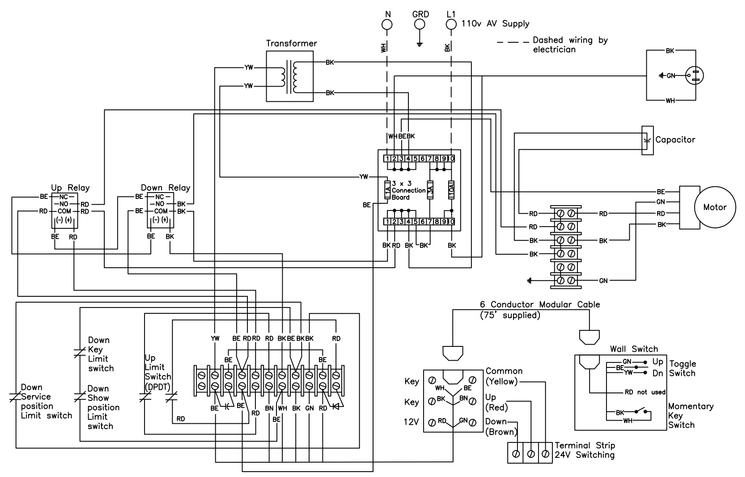

2 PROJECTOR LIFT WIRING DIAGRAM

AV-9.00 NOT TO SCALE

Rabun Rasche Rector Reece
ARCHITECTS
44 Broad Street NW, Suite 300
Atlanta, Georgia 30303
P 404-522-9455 F 404-522-9454

This drawing is the property of Rabun Rasche Rector Reece Architects and is not to be reproduced or copied in whole or in part. It is to be used for the Project and Site specifically identified herein and is not to be used on any other project. It is to be returned upon request. Scale as stated hereon are valid on the original drawing, the size of which is 30 inches high by 42 inches long.

DOUGLASVILLE CONFERENCE CENTER

DOUGLASVILLE, GEORGIA

REVIS.	DATE	REMARKS	REVIS.	DATE	REMARKS	REVIS.	DATE	REMARKS	REVIS.	DATE	REMARKS
	03/09/10	FIRE MARSHAL									
	05/14/10	PERMIT SET									
	07/16/10	BID SET									

SHEET TITLE

DETAIL SHEET B
AV SYSTEMS

PROJECT NUMBER 722

DATE 03/09/10

SHEET NUMBER AV-9-02

nti network technologies, inc
www.nticonsultants.com
CONSULTING ENGINEERS
BICSI
Member infoComm INTERNATIONAL

THIS DRAWING IS AN INSTRUMENT OF SERVICE AND, AS SUCH, IS THE PROPERTY OF NETWORK TECHNOLOGIES, INC. DATE IT IS TO BE USED ONLY FOR THE PROJECT AND SITE SPECIFICALLY IDENTIFIED HEREIN. NO PART OF THIS DOCUMENT SHALL BE REPRODUCED OR TRANSMITTED IN ANY FORM OR BY ANY MEANS, ELECTRONIC OR OTHERWISE, WITHOUT THE PRIOR AND EXPRESS WRITTEN PERMISSION OF NETWORK TECHNOLOGIES, INC.
NTI JOB NO. 09-1540

RELEASED FOR CONSTRUCTION

DATA/VOICE INFRASTRUCTURE INSTALLATION NOTES

1.) SEVEN FOOT RELAY RACKS TO BE CPI #55053-703 OR APPROVED EQUIVALENT. RACKS MUST BE FASTENED TO CONCRETE FLOOR AND FASTENED TO LADDER RACK WITH PROPER CPI HARDWARE. RACKS TO BE SUPPLIED IN SUFFICIENT QUANTITY TO PROVIDE RACK SPACE FOR ALL PATCH PANELS AND ASSOCIATED WIRE MANAGEMENT ON CENTER RACK. SIDE RACKS TO BE LEFT UNPOPULATED FOR PLACEMENT OF HUBS AND ASSOCIATED EQUIPMENT BY OWNER.

2.) EQUIPMENT RACKS MUST BE SUPPORTED OVERHEAD WITH 18" WIDE x 6" DEEP LADDER RACK (MP HUSKY OR APPROVED EQUIVALENT) AND FROM RACKS TO WALL IN APPROPRIATE ROOMS AS DEPICTED IN CLOSET LAYOUTS.

3.) VERTICAL WIRE MANAGEMENT TO BE CPI #11729-703. TO BE SUPPLIED BETWEEN EACH RACK AND ON THE ENDS OF ALL RACK CONFIGURATIONS.

4.) A 70" POWER STRIP (CPI #12851-758) SHALL BE FASTENED VERTICALLY TO THE REAR OF CPI RACKS TO PROVIDE POWER TO EQUIPMENT. POWER CABLES FROM EQUIPMENT RACK TO WALL OUTLETS WILL NOT BE PERMITTED.

5.) PATCH PANELS TO BE CATEGORY 6, RJ-45, RACK MOUNT STYLE PANELS TERMINATED TO T568B PIN CONFIGURATION. PATCH PANELS TO BE SUPPLIED IN AMPLE QUANTITY AND PORT CONFIGURATION TO TERMINATE ALL HORIZONTAL DATA CABLES. PROVIDE SEPARATE PATCH PANELS FOR EACH OF THE FOLLOWING OUTLET TYPES - ADMINISTRATIVE, POS AND COMMON AREA. ALL PATCH PANELS SHALL BE LABELED ACCORDINGLY TO PROVIDE CLEAR AND CONCISE INFORMATION DETAILING THE OUTLET CIRCUITING FOR EACH PATCH PANEL PORT. WIRE MANAGEMENT TO BE SUPPLIED BETWEEN EACH PANEL AND ON THE TOP AND BOTTOM OF ALL PANEL ROWS. HORIZONTAL WIRE MANAGEMENT TO BE 2 RACK UNITS IN HEIGHT (3.5").

6.) ALL HORIZONTAL COPPER CABLE TO BE 4 PAIR, PLENUM RATED, UTP, CAT-6, HORIZONTAL FIBER CABLE TO BE - 2 FIBER 50/125 MULTI-MODE (PLENUM RATED). ALL RISER CABLES MUST BE PLENUM RATED. CABLING CONTRACTOR IS RESPONSIBLE FOR VERIFYING WITH LOCAL CODE OFFICIALS THE ACCEPTANCE FOR USE OF ANY NON-PLENUM RATED CABLE. DATA CABLES TO BE BLUE JACKETED, VOICE CABLES TO BE WHITE JACKETED. ALL HORIZONTAL CABLING RUNS SHALL BE SUPPORTED IN THE OPEN SPACE AREAS USING CADDY STYLE CATEGORY 5 J HOOKS USING AN INDEPENDENT SUPPORT SYSTEM (I.E. J-HOOKS MUST NOT BE HUNG FROM CEILING GRID SUPPORT OR ANY OTHER DISCIPLINES SUPPORT SYSTEM). BRIDLE RINGS OR TYING CABLES TO STRUCTURE WILL NOT BE PERMITTED.

7.) FIBER AND COPPER DATA RISER CABLES WILL HOMERUN FROM IDF LOCATIONS TO THE MAIN COMPUTER ROOM PER CABLING RISER DIAGRAM. FIBER RISERS SHALL BE TERMINATED IN THE COMPUTER ROOM IN TO RACK MOUNTED FIBER ENCLOSURES OR WIC BOXES WITH "SC" STYLE CONNECTORS AND BULKHEADS. FIBER ENCLOSURES TO BE SUPPLIED IN APPROPRIATE PORT CONFIGURATION AS REQUIRED. COPPER DATA RISER CABLES SHALL BE TERMINATED IN THE COMPUTER ROOM ON RACK MOUNTED PATCH PANELS. ALL FIBER ENCLOSURES AND TERMINATIONS TO BE CLEARLY LABELED INDICATING THE FLOOR, CLOSET DESIGNATION AND PORT NUMBER SERVED.

8.) ALL RACKS AND CABINETS TO BE PROPERLY GROUNDED PER NEC AND TIA/EIA STANDARDS.

9.) SEE CABLE RISER DIAGRAM, NOTES AND DETAILS FOR TELEPHONE RISER CABLE INFORMATION.

10.) VERTICAL RISERS SHALL BE SECURED TO STEEL ANGLE CHANNEL WITH CABLE STRAPS AT EACH FLOOR, SEE DETAIL SHEET.

11.) 110 BLOCKS TO BE HUBBELL OR EQUIVALENT, CATEGORY 5E RATED. 110 BLOCKS TO BE INSTALLED IN A SUFFICIENT QUANTITY TO FULLY TERMINATE ALL HORIZONTAL VOICE CABLES AND PROVIDE 4 PAIRS PER HORIZONTAL VOICE CABLE FOR RISER CABLE TERMINATIONS. HORIZONTAL AND VERTICAL CROSS-CONNECT CABLE MANAGEMENT TROUGHS MANUFACTURED BY THE SAME MANUFACTURER AS THE 110 BLOCKS MUST BE USED BETWEEN 110 BLOCKS AND VERTICAL BLOCK ARRAYS. D-RINGS WILL NOT BE PERMITTED FOR CABLE MANAGEMENT IN THE 110 BLOCK FIELD. REAR FEED AND CABLE TROUGH TYPE ARRANGEMENT IS REQUIRED FOR THE 110 BLOCKS. REAR FEED AND CABLE DRESSING IN THE CABLE TROUGHS IS REQUIRED FOR ALL CABLE, BOTH WORKSTATION AND RISERS. CABLING CONTRACTORS TO INSTALL ALL HORIZONTAL, RISER AND PBX 110 BLOCKS.

12.) ALL HORIZONTAL CABLING RUNS WILL BE HOMERUN TO THE APPROPRIATE IDF USING THE CEILING SPACES IN THE CORRIDORS AS THE PRIMARY CABLING PATHWAYS, UNLESS OTHERWISE NOTED. DATA CABLES WILL TERMINATE IN TO DATA PATCH PANELS. TELEPHONE HORIZONTAL CABLES SHALL TERMINATE ON THE IDF 110 BLOCKS. CONTRACTOR IS RESPONSIBLE FOR FINAL ROUTING AND FIELD VERIFICATION OF DISTANCE OF STATION RUNS. NO RUN LENGTHS SHALL EXCEED TIA/EIA STANDARDS (90 METERS-MAX).

13.) ALL TELEPHONE AND DATA JACKS SHALL BE CAT-6, 8 POSITION, RJ-45, TERMINATED TO T568B PIN CONFIGURATION. JACKS SHALL BE IVORY IN PUBLIC SPACES, GRAY AT THE BACK-OF-THE-HOUSE (BOH). ALL JACKS SHALL BE LABELED WITH APPROPRIATE ICON FOR VOICE, DATA OR P.O.S. CIRCUIT.

14.) WALL OUTLET FACEPLATES TO BE UP TO 6 POSITIONS PER SINGLE GANG PLATE. MODULAR FURNITURE FACEPLATES TO BE USED WHERE REQUIRED, IF APPLICABLE. BLANKS SHALL BE INSERTED IN OPEN POSITIONS ON FACEPLATE. FACEPLATES TO BE OF THE SAME MANUFACTURER AS THE JACKS AND PATCH PANELS. ALL WALL MOUNTED PHONE OUTLETS INTENDED TO SUPPORT WALL MOUNT PHONE SHALL BE OF WALL MOUNT STYLE.

15.) THE GENERAL CONTRACTOR WILL INSTALL ALL FLOOR MOUNT AND OUTLET BOXES. CABLING CONTRACTOR TO FURNISH AND INSTALL VOICE AND DATA CABLING, FACEPLATES AND JACKS AS DETAILED ON DRAWINGS.

16.) FACEPLATES SHALL BE STAINLESS STEEL IN BOH AREAS. IN PUBLIC SPACES OUTLET SHOULD MATCH ELECTRICAL OUTLETS FACEPLATES, VERIFY FINAL FACEPLATE COLORS WITH I.D. DRAWINGS.

17.) CABLING CONTRACTOR TO FURNISH ALL RACKS, OVERHEAD CABLE TRAY AND ALL ASSOCIATED HARDWARE NECESSARY TO BUILD OUT CABLING SYSTEM INFRASTRUCTURE IN ALL SERVER/ TELEPHONE/MATV, ROOMS TELEPHONE CLOSETS AS DETAILED ON THE DRAWINGS.

18.) LABELING SCHEME SHALL FOLLOW EIA/TIA 568B GUIDELINES AND SHALL BE COORDINATED WITH THE CUSTOMER. LABELS MUST BE PRINTED USING A PRE-APPROVED FORMAT. NO HAND WRITTEN LABELS WILL BE ALLOWED. THE LABELS AT THE PATCH PANEL MUST BE OF THE SAME TYPE NUMBERING SCHEME AS THE WORKSTATION OUTLET. ALL LABELING WILL BE GENERATED USING A "GRID PATTERN" LABELING SCHEME. SEE DETAIL SHEET FOR RECOMMENDED LABELING SCHEME.

19.) INSTALLATION OF CABLING SYSTEM, ALL EQUIPMENT RACKS & LADDER RACKS, GROUNDING, ETC. MUST FOLLOW INSTALLATION GUIDELINES IN THE MOST CURRENTLY PUBLISHED VERSION OF NEC, TIA/EIA 568B, NFPA AND ANY LOCAL, STATE OR MUNICIPAL CODES IN EFFECT AT TIME OF INSTALLATION. ALL CABLE BUNDLES MUST BE INSTALLED USING PROPER WIRE MANAGEMENT TECHNIQUES, USING A NEAT AND WORKMANLIKE FASHION. INSTALLER WILL INSTALL CABLE BUNDLES FOLLOWING ALL TIA/EIA & BICSI GUIDELINES AS TO WIRE TIES, CINCHING TIGHTNESS, BEND RADIUS, NEATNESS, WIRE MANAGEMENT, LABELING, ETC. ANY ASSOCIATED HARDWARE, MATERIAL OR COMPONENT NEEDED TO PROPERLY INSTALL A COMPLETE AND FUNCTIONAL SYSTEM PER THESE GUIDELINES MUST BE INCLUDED IN THE INITIAL BID RESPONSE AND ARE THE RESPONSIBILITY OF THE CABLING CONTRACTOR.

20.) ALL DATA AND FULLY TERMINATED VOICE HORIZONTAL RUNS MUST BE TESTED PER THE LATEST REVISION OF TIA/EIA 568B FOR COMPLIANCE TO CATEGORY 6 SPECIFICATIONS. TESTERS MUST BE LEVEL III RATED. ALL TESTING MUST BE REVIEWED BY CUSTOMER REPRESENTATIVE PRIOR TO ACCEPTANCE OF CABLING SYSTEM. TEST WILL BE CONDUCTED PER THE MOST RECENTLY AVAILABLE VERSION OF SOFTWARE AND HARDWARE. TEST RESULTS MUST BE SUBMITTED IN DISK FORMAT. A PRINTED VERSION IN BRIEF FORMAT MAY BE REQUIRED.

21.) ALL MULTI-MODE FIBER OPTIC TESTS SHALL BE PERFORMED AT THE 850 nm AND 1300 nm WINDOWS IN BOTH DIRECTIONS. SINGLE-MODE FIBER OPTICS TESTS SHALL BE PERFORMED AT THE 1310 nm AND 1550 nm WINDOWS IN BOTH DIRECTIONS (IF APPLICABLE).

22.) ALL CONNECTORS SHALL BE TESTED AND THE LOSS MEASURED IN DB. CONNECTORS MUST HAVE A LOSS OF 0.5 DB OR LESS PER MATED PAIR TO BE ACCEPTED.

23.) ALL FIBER OPTIC LINKS SHALL BE TESTED AND LOSS MEASURED IN DB/KM. ALL FIBER TO BE TERMINATED WITH "SC" STYLE CONNECTORS.

24.) A HARD COPY OF ALL TEST RESULTS INCLUDING LINK LENGTHS, SHALL BE PROVIDED BY THE CONTRACTOR TO THE OWNER. ALL EVENTS ON THE LINK, INCLUDING RETURN LOSS, SHALL BE MEASURED AND COMPLY WITH TIA/EIA 568B REQUIREMENTS.

25.) CABLING CONTRACTOR IS RESPONSIBLE FOR OBTAINING AND REVIEWING ALL PERTINENT DISCIPLINES DRAWINGS AS ARE NECESSARY TO BID AND COMPLETE INSTALLATION OF CABLING SYSTEM. DRAWING SETS WHICH ARE NECESSARY TO ASCERTAIN COMPLETE PROJECT SCOPE INCLUDE, BUT IS NOT LIMITED TO, ARCHITECTURAL, ELECTRICAL AND INTERIOR DESIGNER SETS.

26.) ALL HUBS AND OTHER ELECTRONIC EQUIPMENT SUPPLIED BY CUSTOMER. PROVIDE SEPARATE LINE ITEMS FOR ALL PATCH CORDS REQUIRED:
(2) RJ45-RJ45 FOR EACH HORIZONTAL AND RISER COPPER DATA CABLE AND (2) DUAL SC-SC FOR EACH PAIR OF STRANDS ON HORIZONTAL AND RISER FIBER OPTIC CABLES. COORDINATE FINAL LENGTH REQUIREMENTS WITH THE OWNER. SEE UNIT PRICING SECTION FOR UNIT PRICE REQUIREMENTS. CABLING CONTRACTOR IS RESPONSIBLE FOR PROVIDING AND INSTALLING ALL PRODUCTS, SWITCH AND OTHER ELECTRONIC FOR THE SECURITY SYSTEM AS REQUIRED, TO FURNISH OWNER WITH COMPLETE SYSTEM.

27.) CABLING CONTRACTOR WILL BE RESPONSIBLE FOR FIRESTOPPING ALL WALL AND FLOOR PENETRATIONS PER LOCAL CODES.

GENERAL NOTES

PROJECT OBJECTIVES AND GOALS :
THE MAIN OBJECTIVE IS TO ENSURE SUPERIOR PERFORMANCE OF THE TELEPHONE/DATA COMMUNICATIONS, MATV/CATV AND SECURITY SYSTEMS THROUGHOUT THE CUSTOMERS SITE. THE DESIGN OF THESE INFRASTRUCTURE SYSTEMS IS BASED UPON CURRENT INDUSTRY STANDARD SUPPORTING AN OPEN SYSTEMS ARCHITECTURE.

SCOPE :
THIS PROJECT INVOLVES THE INSTALLATION OF INFRASTRUCTURE SYSTEMS FOR THE VOICE, DATA, P.O.S., MATV/CATV, AV AND SECURITY SYSTEMS. INSTALLER IS RESPONSIBLE FOR PROVIDING ALL CABLES, CONNECTORS, CABLE MANAGEMENT HARDWARE, PATCH PANELS, RACKS AND/OR MOUNTING BRACKETS AND ANY OTHER RELATED PRODUCTS OR HARDWARE REQUIRED TO DELIVER COMPLETED SYSTEM TO CLIENT. CONTRACTOR SHALL INSTALL ALL EQUIPMENT AND CABLING IN THE PROPER SEQUENCE ACCORDING TO THE OVERALL CONSTRUCTION SCHEDULE.

CABLES JACKET FIRE RATINGS :
1.) ALL HORIZONTAL AND RISER CABLES SHALL BE PLENUM RATED.
2.) IF REQUIRED BY LOCAL CODE(S) LIMITED COMBUSTIBLE (MC) CABLE SHALL BE USED IN LIEU OF PLENUM RATED CABLE.

VOICE AND DATA INFRASTRUCTURE :
ALL HORIZONTAL CABLES 4 PAIR, UTP, CAT-6. ALL HORIZONTAL CABLES WILL BE HOMERUN TO THE RESPECTIVE TELECOM ROOM IN ACCORDANCE WITH CABLING RISER DIAGRAM & TERMINATED ACCORDINGLY. ALL HORIZONTAL COPPER CABLES WILL BE TERMINATED ON TO CAT-6, IDC PANELS TO BE FURNISHED IN APPROPRIATE PORT NUMBERS AND CONFIGURATION TO SUPPORT OUTLETS. VOICE OUTLETS WILL BE CONFIGURED PER FLOOR PLAN AND CORRESPONDING OUTLET CONFIGURATION DETAILS. ALL OUTLETS, PATCH PANELS AND CABLE LINKS ARE TO BE LABELED PER ANSI/TIA/EIA STANDARDS.

MATV/CATV:
TELEVISION SERVICE TO THE HOTEL WILL BE ACCOMPLISHED VIA A MATV/CATV SYSTEM. THE SYSTEM SHALL BE CABLED WITH RG-6 AND RG-11 CABLES. CONTRACTOR IS RESPONSIBLE FOR SUPPLYING ALL CABLES, CONNECTORS, BULKHEADS, FACEPLATES, SUPPORT SYSTEM AND ASSOCIATED HARDWARE AS INDICATED ON DRAWINGS AND IN INSTALLATION NOTES. CABLING CONTRACTOR SHALL PROVIDE A COMPLETE MATV/CATV DISTRIBUTION SYSTEM (INCLUDING AMPS, SPLITTERS, ETC.). LABEL ALL CABLE RUNS, HEADEND TERMINATIONS, OUTLET LOCATIONS AND JUNCTION BOX COVERS. THE LABELING SCHEME SHALL BE CLEAR, CONCISE AND REFLECTED ON AS-BUILT DRAWINGS. ALL MATV/CATV RISER CABLES SHALL ULTIMATELY TERMINATE AT THE MATV/CATV SYSTEM BACKBOARD. SEE CABLE RISER DIAGRAM.

SECURITY :
SECURITY SYSTEM WILL CONSIST OF ALL OR SOME OF THE FOLLOWING: CLOSED CIRCUIT CAMERAS, DURESS ALARMS, DOOR CONTACTS KEYPADS, ELECTRONIC LOCKS AND INTERCOM UNITS. ALL COMPONENTS TO BE PROVIDED AND INSTALLED IN APPROPRIATE LOCATIONS PER DRAWINGS. CONTRACTOR IS RESPONSIBLE FOR INSTALLING ALL NECESSARY COMPONENTS, CABLE, HARDWARE, ETC. TO FURNISH COMPLETE SYSTEM. CONTRACTOR WILL BE RESPONSIBLE FOR PROVIDING TRAINING TO OPERATOR PERSONNEL, AS REQUIRED. TO ASSURE THE APPROPRIATE PERSONNEL ARE FAMILIAR AND FLUENT IN OPERATING AND PROGRAMMING SYSTEMS. TRAINING SESSIONS TO BE COORDINATED WITH OWNER/OPERATOR PRIOR TO COMPLETION OF SYSTEM INSTALLATION.

PROPOSAL PREPARATION COSTS:
ALL COSTS ASSOCIATED WITH PREPARATION OF THIS PROPOSAL WILL BE THE RESPONSIBILITY OF THE VENDORS.

WARRANTY, MAINTENANCE AND SUPPORT:
THE WARRANTY PERIOD FOR THIS PROJECT WILL BE FOR A MINIMUM PERIOD OF ONE YEAR ON ALL SYSTEMS WITH THE EXCEPTION OF THE VOICE/DATA CABLING SYSTEM. WARRANTY PERIOD FOR VOICE/DATA SYSTEM IS FIFTEEN YEARS. PLEASE INCLUDE INFORMATION REGARDING WARRANTY PERIOD AND WHAT ITEMS ARE/ARE NOT COVERED UNDER YOUR WARRANTY. VOICE/DATA CABLING VENDOR MUST BE A CURRENTLY CERTIFIED CONTRACTOR FOR THE MANUFACTURER OF THE CABLING SYSTEM USED. VENDOR MAY OFFER AN EXTENDED WARRANTY FOR INSTALLATION OR TECHNOLOGY PERFORMANCE. THIS WARRANTY SHALL BE OFFERED DIRECTLY TO THE CLIENT FROM THE MANUFACTURER AFTER THE INITIAL VENDOR WARRANTY EXPIRES. SUMMARIZE THE COST OF ANY PROPOSED MAINTENANCE AND ONGOING SUPPORT SERVICES AFTER THE INITIAL INSTALLATION FOR THIS PROJECT. INCLUDE THE ASSOCIATED COST FOR ANY AFTER-HOURS SERVICE IN EMERGENCY SITUATIONS. ALL WORK WILL BE SCHEDULED AND CONTINGENT UPON THE SCHEDULE OF THE GENERAL CONTRACTOR. PROVIDE INFORMATION ON THE TEAM THAT WILL PERFORM THIS INSTALLATION. INCLUDE SUPERVISORS NAME, ANY QUALIFICATIONS, CERTIFICATIONS, AND EXPERIENCE OF TEAM MEMBERS. CERTIFICATION IN CAT. 6 SYSTEMS IS REQUIRED FOR THE DATA/VOICE CABLING PORTION OF THIS PROJECT. PROVIDE PROOF OF CERTIFICATION OF TEAM MEMBERS. INCLUDE ANY RCDD MEMBERS ON STAFF OR INSTALLATION TEAM. MAKE WARRANTY DOCUMENTATION AVAILABLE TO THE OWNER'S REPRESENTATIVES, INVOLVED IN TELECOM, SECURITY, MATV/CATV AND AV SYSTEMS AS APPLICABLE.

INSTALLATION DOCUMENTATION
AS-BUILT DRAWINGS ARE REQUIRED FOR THIS INSTALLATION. PROVIDE INFORMATION ON THE TYPE OF RECORDS YOU WILL PROVIDE AND DELIVERY DATE THEREOF. ALL AS-BUILT DRAWINGS SHALL INDICATE OUTLET LOCATIONS AND LABELS AND CABLE PATHWAYS. TERMINATION SCHEDULES FOR ALL PATCH PANELS OR ANY OTHER APPROPRIATE CABLE TERMINATION SHALL ALSO BE PROVIDED.

APPROVED MANUFACTURERS
VOICE/DATA CABLING VENDOR CHOSEN MUST USE THE MANUFACTURERS SPECIFIED COMPONENTS THROUGHOUT FOR CONSISTENCY. VENDOR SHALL SUBMIT CATALOG SPECS. (CUT SHEETS) FOR ALL MAJOR COMPONENTS. IF IT IS DESIRED TO SUBSTITUTE A MAJOR COMPONENT, PLEASE SUBMIT A SPEC. SHEET WITH A REASON FOR SUBSTITUTION FOR REVIEW. HOWEVER, FOR RESPONSE TO THIS RFP SUBMIT BIDS USING ONLY SPECIFIED MANUFACTURERS. BID RESPONSES USING SUBSTITUTED COMPONENTS MUST BE SUBMITTED UNDER SEPARATE COVER AS AN ALTERNATE BID. VENDOR MUST INSTALL A SYSTEM THAT CAN BE WARRANTED FROM A SINGLE MANUFACTURER.

ADDITIONAL GUIDELINES :
1.) TOTAL INSTALLATION MUST FOLLOW APPLICABLE CODES INCLUDING BUT NOT LIMITED TO ANSI/TIA/EIA 568B (FOR STRUCTURED CABLING SYSTEM), NATIONAL ELECTRICAL CODE, NFPA GUIDELINES, AND ANY LOCAL CODES OR ORDINANCES IN EFFECT.
2.) ALL FLOOR AND WALL OPENINGS MUST BE FIRE SEALED ACCORDING TO LOCAL CODES & ORDINANCES BY THE CABLING CONTRACTOR. ALL WALL OPENINGS MUST BE SLEEVED AND FIRE STOPPED.
3.) CABLING CONTRACTOR IS RESPONSIBLE FOR THEIR OWN CLEANUP.
4.) CABLING CONTRACTOR IS RESPONSIBLE FOR SAFE KEEPING OF THEIR OWN MATERIAL. ANY LOSSES OF MATERIAL ARE THE RESPONSIBILITY OF THE VENDOR. THE OWNER, GENERAL CONTRACTOR, ETC. ARE NOT RESPONSIBLE FOR LOSSES.
5.) GENERAL CONTRACTOR MAY ASK CABLING CONTRACTOR TO ATTEND OR HOLD REGULAR AND MANDATORY SAFETY MEETINGS FOR PROJECT MANAGER AND/OR TECHNICIANS.
6.) CABLING CONTRACTOR SHALL COORDINATE WITH GENERAL CONTRACTOR AND ARCHITECT BEFORE DRILLING OR CORING FLOORS FOR CABLE ACCESS.
7.) IT IS THE RESPONSIBILITY OF THE CABLING CONTRACTOR TO VERIFY FINAL OUTLET PLACEMENT PRIOR TO ANY CONDUIT ROUGH IN BOX INSTALLATION. VERIFICATION PROCESS SHALL INCLUDE REFERENCING I.D., MEP AND ARCHITECTURAL DRAWINGS AS WELL AS FIELD VERIFICATION.
8.) RELATED DOCUMENTS, DRAWINGS & GENERAL PROVISIONS OF THE CONTRACT, INCLUDING GENERAL AND SUPPLEMENTARY CONDITIONS & DIVISION 1 SPECIFICATIONS SECTIONS, APPLY TO THIS SECTION.
9.) CABLING CONTRACTOR TO PROVIDE UNIT PRICING FOR CAT. 6 DROPS AS PART OF BID RESPONSE. OWNER MAY CHOOSE TO PURCHASE A BLOCK OF UNIT DROPS TO BE ADDED DURING CONSTRUCTION.
10.) IT IS A RESPONSIBILITY OF A CABLING CONTRACTOR TO IMMEDIATELY NOTIFY NETWORK TECHNOLOGIES, INC. (NTI) OF ANY CONFLICTS/DISCREPANCIES (IF ANY) FOUND IN THIS DOCUMENT. IN CASE OF SUCH CONFLICT, MOST STRINGENT REQUIREMENT APPLIES UNLESS OTHERWISE NOTED/DIRECTED BY NTI. NOTED/DIRECTED BY NTI.

PROJECT WILL NOT BE CONSIDERED COMPLETED UNTIL THE FOLLOWING MINIMUM REQUIREMENTS ARE MET :
1.) ALL TEST RESULTS HAVE BEEN SUBMITTED AND APPROVED.
2.) AS-BUILT DRAWINGS CLEARLY REFLECTING COMPLETED INSTALLATION HAVE BEEN PRESENTED TO OWNER ALONG WITH AUTOCAD VERSION ON DISK.

CABLE PULLING GUIDELINES

1.) MAINTAIN MINIMUM BEND RADIUS OF:
A) 4 TIMES THE CABLE O.D. FOR COPPER UNSHIELDED TWISTED PAIR CABLE.
B) 10 TIMES THE CABLE O.D. OR 1.2" (WHICHEVER IS LARGER) FOR FIBER OPTIC CABLE.

2.) MAXIMUM CABLE LENGTH BETWEEN TELECOMMUNICATIONS CLOSET TERMINATION AND OUTLET IS 90 METERS (295 FEET).

3.) PULLING TENSION ON 4 PAIR, UNSHIELDED TWISTED PAIR CABLE CAN NOT EXCEED 25 POUNDS.

4.) TO MINIMIZE TENSION IN SUSPENDED CABLE RUNS, LIMIT SPANS TO 5 FEET OR LESS BETWEEN SUPPORTS (I.E. J-HOOKS).

5.) DO NOT OVER CINCH CABLE TIES ON CABLE BUNDLES. CABLE TIES SHOULD BE LOOSELY FITTED OVER CABLE(S) SO AS NOT TO CAUSE AN INDENTATION IN THE CABLE JACKETS.

6.) PLENUM RATED CABLE TIES MUST BE USED IN ALL RETURN AIR PLENUM SPACES.

7.) LEAVE A 20'-0" SERVICE LOOP AT EACH END OF FIBER RISER RUNS.

8.) FIBER RISERS SHALL BE LABELED EVERY 50'-0" FOR CLEAR IDENTIFICATION IN PATHWAYS.

9.) LABEL ALL HORIZONTAL CABLE RUNS AT APPROXIMATELY 3'-6" FROM JACK WITH CLEAR, PERMANENT CABLE LABEL.

10.) LABEL ALL RISER CABLE RUNS ON EACH END WITH CLEAR, PERMANENT LABEL INDICATING FLOOR AND CLOSET DESTINATION.

11.) LEAVE A 10'-0" SERVICE LOOP AT EACH END OF ALL TELEPHONE RISERS. LEAVE 6 FOOT SERVICE LOOP AT THE END OF TELEPHONE AND DATA HORIZONTAL CABLES AND A 3' SERVICE LOOP AT THE END OF ALL TV OUTLET CABLE RUNS.

12.) LEAVE 12" OF SLACK NEATLY COILED IN OUTLET BOX FOR EACH HORIZONTAL CABLE RUN.

13.) TO AVOID SOURCES OF EMI ON UNSHIELDED CABLES, MAINTAIN THE FOLLOWING MINIMUM SEPARATION DISTANCES BETWEEN CABLING PATHWAYS AND POTENTIAL SOURCES:

A) 4 FEET FROM MOTORS OR TRANSFORMERS
B) 1 FOOT FROM CONDUIT OR CABLES USED FOR ELECTRICAL POWER DISTRIBUTION
C) 5 INCHES FROM FLUORESCENT LIGHTING

CABLING PATHWAYS SHOULD CROSS PERPENDICULAR TO FLUORESCENT LIGHTING AND ELECTRICAL POWER CABLES OR CONDUITS.
THESE GUIDELINES ARE NOT INTENDED TO SERVE AS A SUBSTITUTE FOR TIA/EIA 568B STANDARDS. CONTRACTOR SHALL BE RESPONSIBLE FOR KNOWING, UNDERSTANDING AND CONFORMING TO THE SPECIFICATIONS CONTAINED WITHIN ALL OF THE FOLLOWING STANDARDS :

- ANSI/TIA/EIA 568B.1, B.2, AND B.3 - COMMERCIAL BUILDING TELECOMMUNICATIONS CABLING STANDARDS.
- ANSI/TIA/EIA-569 - COMMERCIAL BUILDING STANDARD FOR TELECOMMUNICATIONS PATHWAYS AND SPACES
- ANSI/TIA/EIA-606 - ADMINISTRATION STANDARD FOR THE TELECOMMUNICATIONS INFRASTRUCTURE OF COMMERCIAL BUILDINGS
- ANSI/TIA/EIA-607 - COMMERCIAL BUILDING GROUNDING AND BONDING REQUIREMENTS FOR TELECOMMUNICATIONS

14.) ALL CONDUIT AND INNER DUCT PATHWAYS SHALL BE LEFT POPULATED WITH A PULLSTRING FOR FUTURE USE.

15.) CABLE BUNDLES TO BE DRESSED IN EQUIPMENT ROOMS AT 4' INTERVALS WITH VELCRO TIES.

STRUCTURED CABLING SYSTEM COMPONENTS SPECIFICATION LIST

DESCRIPTION	MANUFACTURER	PART NUMBER	COMMENTS
CATEGORY 6, 4 PAIR, UTP, CMP, GRAY JACKET	MOHAWK	M58285	
CATEGORY 6, 4 PAIR, UTP, CMP, WHITE JACKET	MOHAWK	M58280	
CATEGORY 6, 4 PAIR, UTP, CMP, BLUE JACKET	MOHAWK	M58281	
CATEGORY 3, 50 PAIR, UTP, CMP	MOHAWK	M56126	
CATEGORY 3, 100 PAIR, UTP, CMP	MOHAWK	M56128	
CATEGORY 3, 200 PAIR, UTP, CMP	MOHAWK	M56129	
6 FIBER, OFNP-ADVANCELITE 1000	MOHAWK	M9C045	
12 FIBER, OFNP-ADVANCELITE 1000	MOHAWK	M9C048	
STANDARD 7' FLOOR MOUNTED EQUIPMENT RACK (45-RMU)	CPI	55053-703	
VERTICAL CABLE MANAGER FOR FLOOR RACKS	CPI	40095-703	
RACK MOUNT HORIZONTAL WIRE MANAGER	CPI	30530-719	
HUB SHELF, BACKBOARD MOUNT	CPI	40074-700	
20 POSITION POWER OUTLET STRIP	CPI	12851-758	1-PER 7' FLOOR RACK
DOUBLE SIDED SHELF, 21.75" D	CPI	40108-719	
DOUBLE SIDED SHELF, 26" D	CPI	11054-719	
SWING GATE WALL MOUNT RACK (27-RMU)	CPI	11807-725	
WALL MOUNT EQUIPMENT CABINET-45" HIGH (26-RMU)	CPI	12419-748	
WALL MOUNT EQUIPMENT CABINET-36" HIGH (18-RMU)	CPI	12419-736	
FAN KIT 100 CFM	CPI	12804-701	(2) PER WALL MOUNTED CABINET
FILTER KIT, BLACK	CPI	12805-701	
FILTERS FOR FAN KIT	CPI	12806-001	(1) BOX PER WALL MOUNTED CABINET
POWER STRIP FOR WALL MOUNT CABINET	CPI	12816-707	(1) PER WALL MOUNTED CABINET
FIRESTOP SYSTEM FOR SLOTS AND LARGE WALL PENETRATIONS	SPECIFIED TECHNOLOGIES, INC.	C-AJ-8093	OR APPROVED EQUIVALENT
WALL PHONE FACEPLATE - RECESSED STYLE	HUBBELL	P630SR1GC6	USED FOR ALL WALL PHONES (HOUSE AND PUBLIC) AT 42"AFF OR HIGHER
WEATHERPROOF ENCLOSURE FOR OUTDOOR MOUNTED PHONES	GAI-TRONICS	MODEL 255	
RJ-45, CAT 6, 8 POSITION, T568B, PHONE JACK INSERT (* DENOTES COLOR)	HUBBELL	HXJ6*	
RJ-45, CAT 6, 8 POSITION, T568B, DATA JACK INSERT (* DENOTES COLOR)	HUBBELL	HXJ6*	
F-TYPE BULKHEAD MODULE (** DENOTES COLOR)	HUBBELL	SFF**X	
BLANK INSERTS (* DENOTES COLOR)	HUBBELL	SFB**10	
FACEPLATE, SINGLE GANG (x DENOTES NUMBER OF PORTS, yy DENOTED COLOR)	HUBBELL	IFP1xyy	
CATEGORY 6 PATCH PANEL, 568B (pp DENOTES PORT COUNT)	HUBBELL	P6EppU	# DENOTES PORT QTY.
CATEGORY 3 TELECOM PATCH PANEL (24 PORT, 4 MALE RJ-21 CONNECTORS ON BACK)	HUBBELL	BRMCC2580419	# DENOTES PORT QTY.
300 PAIR 110 DISTRIBUTION FRAME	HUBBELL	110WMK	
110 DISTRIBUTION CABLE MANAGER FRAME	HUBBELL	188BB	
100 PAIR 110 XC BLOCKS WITH MOUNTING LEGS	HUBBELL	110BLK100BWL	
12 PORT WIC BOX	HUBBELL	FTU2SP	
24 PORT RACK MOUNT FIBER ENCLOSURE-LOADED W/ 12 SC	HUBBELL	FPR012SCM	
24 PORT RACK MOUNT FIBER ENCLOSURE-LOADED-SC	HUBBELL	FPR024SCM	
72-144 PORT RACK MOUNT FIBER ENCLOSURE-UNLOADED	HUBBELL	FCR525SPR	
6 PACK SC INSERT FOR 72-144 PORT ENCLOSURE AND 12 PORT WIC BOX	HUBBELL	FSPSCD6	
HORIZONTAL CABLE MANAGER WITH MOUNTING LEGS	HUBBELL	110TRA	
VELCRO TIE WRAPS, BACKBOARD MOUNT	HUBBELL	MCCMV90S10	

NOTES : 1.) SOME OF THE ABOVE LISTED PRODUCTS MAY NOT BE REQUIRED FOR THIS PROJECT.
2.) CABLING CONTRACTOR IS RESPONSIBLE FOR PROVIDING AND INSTALLING ALL PRODUCTS, AS REQUIRED, TO FURNISH OWNER WITH COMPLETE SYSTEM.
3.) USE LIMITED COMBUSTIBLE CABLES/COMPONENTS WHERE REQUIRED BY LOCAL CODES.

UNIT PRICE

CABLING CONTRACTOR SHALL PROVIDE UNIT PRICES FOR COPPER (CAT. 6 RJ-45 TO RJ-45) AND FIBER (50/125 MULTIMODE, SC-SC) PATCH CORDS. INCLUDE VARIOUS LENGTHS SUCH AS 3'-0", 5'-0", 7'-0" AND 10'-0".

MATV/CATV INSTALLATION NOTES

1.) REFER TO MATV/CATV SYSTEM SPECIFICATIONS AND MATV/CATV SYSTEM COMPONENTS SPECIFICATION LIST ON THIS SHEET. CONTRACTOR MAY USE SPECIFIED COMPONENTS OR NTI'S APPROVED EQUIVALENT. IN EITHER CASE THE MATV/CATV CONTRACTOR IS RESPONSIBLE FOR THE SIGNAL QUALITIES INDICATED AT MATV/CATV SYSTEM SPECIFICATIONS.

2.) TV OUTLET LOCATIONS SHOULD TO BE HOMERUN IN ACCORDANCE WITH MATV/CATV CABLING RISER DIAGRAM. OUTLET LOCATIONS IN PUBLIC AND ADMIN. AREAS TO BE HOMERUN TO THE NEAREST TR/IDF LOCATION.

3.) CABLING CONTRACTOR TO LEAVE A MINIMUM OF 12" OF SLACK COILED IN THE OUTLET BOX AT OUTLET END. OUTLET CONNECTOR TO BE TERMINATED INTO SINGLE PORT FACEPLATE WITH BULKHEAD. IN PUBLIC AREAS - TERMINATE WITH F-CONNECTOR INSERT.

4.) MATV/CATV IDF LOCATIONS TO BE INTERCONNECTED WITH MATV/CATV MDF VIA TWO RG-11 PLENUM RATED RISER CABLES. CONTRACTOR TO LEAVE A MINIMUM OF A SIX FOOT SERVICE LOOP IN EACH IDF LOCATION.

5.) CONTRACTOR IS RESPONSIBLE FOR LABELING ALL MATV/CATV SYSTEM COAX CABLE RUNS AS FOLLOWS:
A) ALL RG-6, CABLE RUNS SHALL BE LABELED WITH APPROPRIATE ROOM NUMBERS CONNECTED TO THAT RUN.
B) ALL LABELING INFORMATION SHALL BE RECORDED ON AS-BUILT DRAWINGS UPON PROJECT COMPLETION.
C) THE LABELING SYSTEM SHALL DESIGNATE THE CABLES ORIGIN AND DESTINATION ON EACH END OF THE RUN.

6.) PROVIDE 2-1/2" DIAMETER SLEEVE FOR ALL FLOOR AND ROOF SLAB PENETRATIONS (WHERE APPLICABLE).

7.) NO CORING OR FLOOR DRILLING IS ALLOWED PRIOR TO COORDINATION AND APPROVAL FROM GENERAL CONTRACTOR.

CCTV ALTERNATE(S)

1.) PROVIDE ALTERNATE PRICE FOR IP-BASED SYSTEM THAT INCLUDES ALL NECESSARY NETWORK HARDWARE.
2.) INCLUDE COST DIFFERENTIAL FOR USING CAT. 6 CABLE VS. COAXIAL CABLE IN ITEM 1 ABOVE.

MATV/CATV SYSTEM SPECIFICATIONS

1.) THE MATV/CATV DISTRIBUTION SYSTEM SHALL CONSIST OF ALL EQUIPMENT, COMPONENTS AND CABLING NECESSARY TO DISTRIBUTE NTSC RF TELEVISION SIGNALS. THIS SCOPE INCLUDES, BUT IS NOT LIMITED TO:
A.) COAXIAL CABLE
B.) DISTRIBUTION AMPLIFIERS
C.) DISTRIBUTION PASSIVES (SPLITTERS, DIRECTIONAL COUPLERS, FILTERS)
D.) CABLE CONNECTORS, WALL PLATES AND ADAPTERS

2.) THE CONTRACTOR SHALL PROVIDE SUBMITTALS TO OWNER, OWNER'S REPRESENTATIVE AND OWNER'S MATV/CATV SYSTEM VENDOR(S) FOR APPROVAL PRIOR TO INSTALLATION. SUBMITTALS SHALL COMPLETELY DESCRIBE THE MATV/CATV DISTRIBUTION SYSTEM AND SHALL INCLUDE SCHEMATIC DIAGRAMS, COMPONENT AND CABLE CUTSHEETS, TAP VALUES AND OTHER PERTINENT COMPONENT SETTINGS.

3.) THE MATV/CATV DISTRIBUTION SYSTEM SHALL PROVIDE CLEAR RECEPTION OF TELEVISION SIGNALS TO ALL DESIGNATED RECEIVING LOCATIONS WITHIN THE HOTEL. REFER TO FLOOR PLANS FOR TV OUTLET LOCATIONS.

4.) ALL PASSIVE DISTRIBUTION COMPONENTS SHALL HAVE A MINIMUM OPERATIONAL BANDWIDTH OF 5 MHZ - 1000 MHZ. THE RFI SHIELDING FOR ALL PASSIVE DEVICES SHALL BE NO LESS THAN 100 DBMV.

5.) ALL END-OF-RISERS AND UNUSED DEVICE PORTS SHALL BE TERMINATED AT 75 OHMS. ALL "F" CONNECTIONS ON ACTIVE DEVICES SHALL BE TIGHTENED TO A TORQUE OF 15 INCH POUNDS. ALL "F" CONNECTIONS ON PASSIVE DEVICES SHALL BE TIGHTENED TO A MINIMUM TORQUE OF 15 INCH POUNDS, NOT TO EXCEED 25 INCH POUNDS.

6.) ALL COAXIAL CABLE SHALL HAVE AN IMPEDANCE OF 75 OHMS. ALL RG-6 AND RG-11 CONNECTORS SHALL BE COMPRESSION TYPE AND SHALL MEET THE MANUFACTURER'S SPECIFICATIONS FOR THE TYPE OF CABLE BEING USED. ALL COAXIAL CABLES SHALL HAVE A MINIMUM RF SHIELDING CHARACTERISTIC OF 60%. EACH REEL OF COAXIAL CABLE USED IN THE SYSTEM SHALL CONTAIN AN ATTACHED CONFIRMATION TAG STATING THAT THE ROLL WAS SWEEP TESTED FOR 1 GHZ OPERATION.

7.) PLENUM RATED CABLE SHALL BE USED FOR ALL RUNS THROUGH PLENUM SPACES. CONTRACTOR IS RESPONSIBLE FOR VERIFYING ACCEPTANCE OF THE USE OF NON-PLENUM NON-PLENUM RATED CABLE, WHERE APPLICABLE, WITH LOCAL CODE OFFICIALS.

8.) ALL CABLE RUNS SHALL BE CLEARLY MARKED ON BOTH ENDS IDENTIFYING ROOM(S) AND OR OUTLET NUMBER(S).

9.) AMPLIFIER INPUT AND OUTPUT CABLES SHALL NOT TO BE BUNDLED TOGETHER. AMPLIFIER POWER CORDS (A/C OR D/C) SHALL NOT TO BE BUNDLED WITH COAXIAL CABLES. MAXIMUM AMPLIFIER OUTPUT LEVEL SHALL BE 44 DBMV AT 750MHZ. MAXIMUM AMPLIFIER SLOPE SHALL BE 6 DB. INPUT LEVELS SHALL BE WITHIN MANUFACTURER SPECIFICATIONS. ROOM-TO-ROOM ISOLATION SHALL BE GREATER THAN 30 DBMV.

10.) THE MAXIMUM ALLOWABLE RETURN SIGNAL LOSS FROM THE FURTHEST POINT BACK TO THE HEADEND SHALL BE 50 DBMV AT 20 MHZ.

11.) FACEPLATE COLOR AND FINAL LOCATION OF OUTLETS SHALL BE COORDINATED WITH ELECTRICAL AND I.D. DRAWINGS.

12.) ALL HORIZONTAL CABLE RUNS SHALL BE SUPPORTED WITH J-HOOKS FASTENED TO BUILDING STRUCTURE. USE OF SPRINKLER LINES, CEILING GRID, PLUMBING, LIGHT FIXTURES OR ANY OTHER SYSTEM AS A MEANS OF SUPPORT IS NOT PERMITTED.

13.) SIGNAL LEVELS AT THE WALL OUTLET SHALL BE NO LESS THAN +5 DBMV AND SHALL NOT EXCEED +10 DBMV AT 750 MHZ. SLOPE BETWEEN 55 MHZ & 750 MHZ SHALL NOT EXCEED 6 DBMV AT THE WALL OUTLET.

14.) UPON COMPLETION OF THE INSTALLATION, INJECT, TEST AND DOCUMENT SIGNAL LEVELS IN ALL ROOMS AND PUBLIC AREAS AT 55 MHZ & 750 MHZ. PROVIDE A COPY OF THE SIGNAL LEVELS TO THE OWNER AND OWNER'S HEADEND SYSTEM VENDOR. ALL TESTING AND REMEDIAL WORK SHALL BE COMPLETED TWO MONTHS PRIOR TO OPENING DATE.

15.) DEVELOP AND FURNISH AS-BUILT DRAWINGS AT THE COMPLETION OF THE INSTALLATION INDICATING THE LAYOUT OF THE MATV/CATV DISTRIBUTION SYSTEM, I.E., TYPICAL RISERS, TYPICAL CABLE PATHS, AMPLIFIER SET-UP INFORMATION, CABLE TYPES AND FOOTAGES, TAP VALUES AND ANY OTHER PERTINENT INFORMATION PERTAINING TO THE DISTRIBUTION SYSTEM.

16.) ALL COAXIAL CABLES SHALL HAVE A MINIMUM OF -80 dB OF SHIELDING.

17.) TWO WAY AMPLIFIERS SHALL BE USED. AMPLIFIERS SHALL HAVE A FORWARD FREQUENCY PASS RATING OF 49 MHz TO 750 MHz. THE RETURN SHALL PASS AT A MINIMUM 5 MHz TO 36 MHz.

18.) PROVIDE 120V AC OUTLET FOR EACH AMPLIFIER AT THE SPECIFIED LOCATIONS.

19.) PROVIDE CLIMATE CONTROLLED ROOM WITH A DEDICATED 20 AMP ELECTRICAL OUTLET FOR THE HEAD END EQUIPMENT. THE TEMPERATURE SHALL BE CONTAINED WITHIN 50°-75°F 24X7.

20.) PROVIDE A 2" CONDUIT FROM THE MATV/CATV ROOM TO THE SERVICE EXPRESS/WHATEVER WHENEVER / RAPID RESPONSE AREA.

21.) PROVIDE A 2" CONDUIT FROM THE MATV/CATV ROOM TO THE DATA CENTER.

22.) PROVIDE TWO CAT. 5E CABLES FROM TELCO DEMARCATION TO THE MATV/CATV ROOM. COIL 25'-0" UNTERMINATED SERVICE LOOP ON EACH END. LABEL CABLES ON BOTH ENDS "FOR MATV/CATV USE".

SECURITY SYSTEM ROUGH IN REQMTS.

SYMBOL	DEVICE	ROUGH IN REQUIREMENTS	RECOMMENDED MANUFACTURER
(DC)	DOOR CONTACT ALARMS	3/4"ø CONDUIT FROM DOOR FRAME TO ACCESSIBLE AREA IN CEILING, 3/4"ø HOLE IN DOOR FRAME NEAR CENTER FOR ACCESS TO CONDUIT FEED. CABLE TO BE PLENUM RATED - ROUGHED IN PRIOR TO CEILING INSTALLATION.	SENTROL 1078C 3/4"ø
(DA)	DURESS ALARMS (HOLD-UP ALARM)	FOR WALL MOUNT TYPE - 4"x4" BOX WITH 3/4"ø CONDUIT STUB TO CEILING ACCESSIBLE AREA, FOR COUNTER OR DESK MOUNT - MOUNT IN MILLWORK-PROVIDE 3/4"ø CONDUIT PATHWAY TO ACCESSIBLE AREA IN CEILING.	SENTROL 3040-DESK MOUNT VERSION
CCTV-MD	CCTV-MINI DOME CEILING MOUNTED	4"x4" BOX WITH SINGLE GANG MUD RING AND 3/4"ø CONDUIT STUBBED TO ACCESSIBLE CEILING AREA CONTIGUOUS TO THE NEAREST TEL. CLOSET. SEE CONDUIT SCHEMATIC - DV-9.06	REFERENCED IN INSTALLATION NOTES
CCTV-EH	CCTV CAMERA IN EXTERIOR WEATHERPROOF HOUSING	4"x4" BOX WITH DOUBLE GANG MUD RING AND 3/4"ø CONDUIT STUBBED TO ACCESSIBLE AREA IN CEILING CONTIGUOUS TO NEAREST TEL. CLOSET. SEE CONDUIT SCHEMATIC - DV-9.06	REFERENCED IN INSTALLATION NOTES
KP	SECURITY CONTROL KEY PAD	4"x4" BOX WITH SINGLE GANG MUD RING AND 3/4"ø CONDUIT STUBBED TO ACCESSIBLE AREA IN CEILING.	
IC	FLUSH WALL MTD. INTERCOM UNIT	APHONE 2-GANG BACK BOX OR SBX-2G BACKBOX AND 3/4"ø CONDUIT STUBBED TO ACCESSIBLE AREA IN CEILING. VENDOR SPECIFIC, CONSULT VENDOR FOR SPECIFICATIONS OF PROPOSED UNIT.	
IC/BASE	INTERCOM BASE STATION	VENDOR SPECIFIC, CONSULT VENDOR FOR SPECIFICATIONS OF PROPOSED UNIT.	
SCE	SECURITY SYSTEM CONTROL ENCLOSURE	ENCLOSURE FOR TERMINATIONS FOR DOOR CONTACTS, DURESS ALARMS, MOTION DETECTORS, DUPLEX OUTLET AT 48" AFF, 120 VAC DUPLEX RECEPTACLE ON EMERGENCY POWER.	CADDX
SMUX	CCTV SYSTEM MULTIPLEXER	4"x4" BOX WITH DOUBLE GANG MUD RING AND 2" CONDUIT STUBBED TO ACCESSIBLE AREA IN CEILING. MULTIPLEXER IS A DESK TOP UNIT. OUTLET BOX SHOULD BE MOUNTED AT COUNTER LEVEL NEAR LOCATION OF MULTIPLEXER, COORDINATE WITH OWNER.	REFERENCED IN INSTALLATION NOTES
ML	MAGNETIC LOCK	120 VAC ON EMERGENCY POWER IN CEILING SPACE ABOVE DOOR.	
EBAR	ELEVATOR REMOTE ACCESS READER	LOCATED INSIDE OF ELEVATOR, TO BE INSTALLED AND PROGRAMMED BY ELEVATOR VENDOR FOR SPECIFIC PROPERTY NEEDS.	REFER TO DOOR HARDWARE SPECS.

NOTE : SOME ITEMS LISTED IN THE ABOVE TABLE MAY NOT BE INCLUDED IN THIS PROJECT. THE ABOVE ROUGH-IN REQUIREMENTS ARE INTENDED TO SERVE AS REFERENCE INFORMATION ONLY FOR TYPICAL SECURITY SYSTEM DEVICES. OTHER EQUIPMENT MANUFACTURER PRODUCTS MAY BE USED BASED UPON APPROVAL OF SUBMITTALS.

MATV/CATV COMPONENT SCHEDULE

DESCRIPTION		PART NUMBER	COMMENTS
SPLITTERS			
2 Way 1 GHz Drop Splitter	Toner Cable Equipment, Inc.	XGVS -2	Greater than 120 dB RFI Integrity
3 Way 1 GHz Drop Splitter	Toner Cable Equipment, Inc.	XGVS -3	Greater than 120 dB RFI Integrity
3 Way 1 GHz Drop Splitter	Toner Cable Equipment, Inc.	XGVS -3B	Greater than 120 dB RFI Integrity
4 Way 1 GHz Drop Splitter	Toner Cable Equipment, Inc.	XGVS -4	Greater than 120 dB RFI Integrity
6 Way 1 GHz Drop Splitter	Toner Cable Equipment, Inc.	XGVS -6	Greater than 120 dB RFI Integrity
8 Way 1 GHz Drop Splitter	Toner Cable Equipment, Inc.	XGVS -8	Greater than 120 dB RFI Integrity
2 Way 1 GHz Vertical Splitter - Solder Back	Pico Macom	TSV-2SB	Greater than 130 dB RFI Integrity
3 Way 1 GHz Vertical Splitter - Solder Back	Pico Macom	TSV-3SB	Greater than 130 dB RFI Integrity
4 Way 1 GHz Vertical Splitter - Solder Back	Pico Macom	TSV-4SB	Greater than 130 dB RFI Integrity
6 Way 1 GHz Vertical Splitter - Solder Back	Pico Macom	TSV-5SB	Greater than 130 dB RFI Integrity
8 Way 1 GHz Vertical Splitter - Solder Back	Pico Macom	TSV-6SB	Greater than 130 dB RFI Integrity
TAPS - DIRECTIONAL COUPLERS			
1-Port Directional Coupler, 5-1,000 MHz - Solder Back	Pico Macom	TCS-(*)-SB	(*) Denotes Tap Value- 6, 9, 12, 16, 20, 24, 27, 30 dB
1-Port Directional Coupler, 5-1,000 MHz - Solder Back	Pico Macom	TSCW-(*)-SB	Wall Plate Mount
2-Port Directional Coupler, 5-1,000 MHz - Solder Back	Pico Macom	TSC2-(*)-SB	(*) Denotes Tap Value- 6, 9, 12, 16, 20, 24, 27, 30 dB
4-Port Directional Coupler, 5-1,000 MHz - Solder Back	Pico Macom	TSC4-(*)-SB	(*) Denotes Tap Value- 6, 9, 12, 16, 20, 24, 27, 30 dB
2-Port Tap, 5-1,000 MHz	Toner Cable Equipment, Inc.	TGT2-(*)	(*) Denotes Tap Value- 4T, 8, 11, 14, 17, 20, 23, 26, 29, 32 dB
4-Port Tap, 5-1,000 MHz	Toner Cable Equipment, Inc.	TGT4-(*)	(*) Denotes Tap Value- 4T, 8, 11, 14, 17, 20, 23, 26, 29, 32 dB
MATV/CATV CONNECTORS			
F-Series Coaxial Crimp Connector for RG11 Plenum Cable	Pico Macom	F-11PAP	Brass, Attached Pin, Use with Belden 89292
F-Series Coaxial Crimp Connector for RG11 Cable	Pico Macom	F-11-457T	Brass, Attached Pin
F-Series Coaxial Crimp Connector for RG11 Cable	Pico Macom	F-11P	Brass
F-Series Coaxial Crimp Connector for Plenum RG6 Cable	Pico Macom	F-56P	Brass, Use W/ Belden 89120
F-Series Coaxial Crimp Connector for RG6 Cable	Pico Macom	F-56-324T	Brass, for RG6 60-67% Braid Coverage
BLANK COVER WALL PLATE			
Single Gang, Flush Mount, White	Pico Macom	BP3-W	
Single Gang, Flush Mount, Ivory	Pico Macom	BP3-IV	
COAXIAL CABLES			
Series 6, 18 AWG, PVC/CMR, 60% AL Braid Coverage	Belden	9116R	CATVR, CMR Rating
Series 6, 18 AWG, Plenum, Duofoil & 95% TC Braid Coverage	Belden	89120	CATVP, CMP Rating
Series 11, 14 AWG, Plenum, Duofoil & 63% TC Braid Coverage	Belden	89292	CATVP, CMP Rating
Series 11, 14 AWG, PVC/CMR, Duobond & 60% AL Braid Coverage	Belden	1523R	CATVR, CMR Rating
AMPLIFIERS AND ACCESSORIES			
Broadband Indoor Distribution Amplifiers, 750 Mhz, 30 dB Gain	Blonder Tongue Labs, Inc.	BIDA 75A-30P	Power Doubling
Broadband Indoor Distribution Amplifiers, 750 Mhz, 43 dB Gain	Blonder Tongue Labs, Inc.	BIDA 75A-43P	Power Doubling
Fixed Attenuators (pads) 1-20 dB in 1 dB Step	Blonder Tongue Labs, Inc.	BIDA FA	Stock Number 5411A(*) Specify Isolation Value or Tap Value
Cable Equalizers, 750 MHz	Blonder Tongue Labs, Inc.	BIDA CE-7	Stock Number 5477(*) Specify Isolation Value or Tap Value

NOTE : OTHER APPROVED MANUFACTURER: COLEMAN.

DRAWING INDEX

2009-11-11

SHEET NO.	DESCRIPTION	SHEET COUNT
	SPECIAL SYSTEMS	
DV-0-00	COVER SHEET; SPECS., DRAWING INDEX AND NOTES	1 OF 13
DV-2-00	LOADING DOCK AT GROUND LEVEL	2 OF 13
DV-2-01	GARAGE AT GROUND LEVEL	3 OF 13
DV-2-02	MAIN LEVEL CONFERENCE CENTER	4 OF 13
DV-2-02A	MAIN LEVEL CONFERENCE CENTER - CABLE TRAY & WIRELESS NODE	5 OF 13
DV-2-03	GARAGE AT MAIN LEVEL	6 OF 13
DV-2-04	GARAGE LEVEL 2	7 OF 13
DV-2-05	GARAGE LEVEL 3	8 OF 13
DV-9-00	MDF/IDF PARTIAL PLANS, ELEVATIONS AND NOTES	9 OF 13
DV-9-02	TELEPHONE/DATA/MATV/CATV CONDUIT RISER DIAGRAM	10 OF 13
DV-9-04	INSTALLATION DETAILS	11 OF 13
DV-9-05	EQUIPMENT RACK DETAILS	12 OF 13
DV-9-06	SECURITY DIAGRAM	13 OF 13

GENERAL NOTES

1.) SEE COVER SHEET FOR ADDITIONAL INFORMATION PERTAINING TO BACK BOX AND CONDUIT ROUGH IN REQUIREMENTS FOR SECURITY SYSTEM DEVICES.

2.) ADDITIONAL CONDUIT INFORMATION MAY BE NOTED ON THE FLOOR PLANS.

3.) OUTLET MOUNTING HEIGHTS MAY BE NOTED ON THE DRAWINGS, VERIFY ALL MOUNTING HEIGHTS WITH ARCHITECTURAL AND INTERIOR DESIGN DRAWINGS. COORDINATE WITH AV DRAWINGS - IT/TV JACKS TO BE MOUNTED WITHIN AV TECH PANEL.

4.) ALL POINT OF SALE TERMINAL AND PRINTER LOCATIONS TO BE CROSS CHECKED AND VERIFIED WITH KITCHEN DRAWINGS.

5.) CARD READERS ARE SHOWN ON THESE FLOOR PLANS FOR REFERENCE ONLY TO PROVIDE VISUAL REPRESENTATION OF ACCESS CONTROL LOCATIONS. CARD READER SPECIFICATIONS AND FINAL LOCATIONS SHOULD BE DERIVED FROM THE ARCHITECTS DOOR HARDWARE SCHEDULE.

6.) ALL CROSS CONNECTING OF STATION VOICE CABLES TO RISER CABLES IS PART OF THIS SCOPE OF WORK - TO PROVIDE COMPLETE CONTINUITY OF SIGNAL FROM JACK TO MDF.

7.) FURNISHING OF AND INSTALLATION OF ALL AMPS AND TAPS FOR TV SIGNAL DISTRIBUTION SYSTEM IS PART OF THIS SCOPE OF WORK - TO PROVIDE COMPLETE CONTINUITY OF SIGNAL FROM OUTLET TO TV MDF.

8.) SEE COVER SHEET FOR ADDITIONAL INFORMATION, NOTES ON ALL SYSTEMS. REVIEW AND VERIFY OTHER PERTINENT DISCIPLINE DRAWINGS (ARCHITECT, I.D., KITCHEN, ELECTRICAL, MECHANICAL, ETC.) AND SUBMIT RFI FOR ANY DISCREPANCIES FOUND WITH RESPECT TO NTI DRAWINGS.

9.) NOT ALL SYMBOLS ARE USED ON EVERY PROJECT. REFER TO FLOOR PLANS FOR OUTLET LOCATIONS AND QUANTITIES.

DEVICE REQUIREMENT SCHEDULE

SYMBOL	DESCRIPTION	BACKBOX REQUIREMENT	CONDUIT REQUIREMENT	POWER REQUIREMENT	NUMBER OF JACKS	NUMBER OF CABLES	TERMINATION AT CLOSET END	COMMENTS
▽	1 POSITION VOICE OUTLET	1	4	NOT REQUIRED	(1) RJ-45	1	110 BLOCK	
▽ H	HOUSE TELEPHONE	1	4	NOT REQUIRED	(1) RJ-45	1	110 BLOCK	PHONE OUTLETS ABOVE STANDARD OUTLET HEIGHT REQUIRE FACEPLATE WITH MOUNTING STUDS.
▼	2 POSITION VOICE/DATA OUTLET	1	4	9	(2) RJ-45	2	110 BLOCK / PATCH PANEL	
▼ 2	2 POSITION DATA OUTLET	1	4	9	(2) RJ-45	2	PATCH PANEL	
▼ 1	1 POSITION DATA OUTLET	1	4	9	(1) RJ-45	1	PATCH PANEL	
▼ 4	4 POSITION DATA OUTLET	1	6	9	(4) RJ-45	4	PATCH PANEL	
▼ 2 (floor)	2 POSITION DATA OUTLET - FLOOR MOUNTED	8	4	11	(2) RJ-45	2	PATCH PANEL	
▼ 2 POS-T	2 POINT OF SALE - 2 POSITION OUTLET	1	4	10	(2) RJ-45	2	DEDICATED POS PATCH PANEL	
POS-P ▼	1 PORT POINT OF SALE PRINTER LOCATION OUTLET	1	4	10	(1) RJ-45	1	DEDICATED POS PATCH PANEL	
▼ TC	TIMECLOCK OUTLET	2	4	SEE COMMENT	(1) RJ-45	1	PATCH PANEL	REQUIRES EMERGENCY POWER OUTLET DIRECTLY BESIDE-SEE DETAIL SHEET
▼ WN	WIRELESS NETWORK DATA PORT	BISCUIT BLOCK SEE DETAIL	4	NOT REQUIRED	(1) RJ-45	1	PATCH PANEL	TYPICALLY MOUNTED IN ACCESSIBLE CEILING SPACE AREA- LEAVE 25' COIL AT TERMINATION END FOR FUTURE POTENTIAL ADJUSTMENT
▼ 2(A)	(2) PORT ADMIN AREA OUTLET	1	6	9	(2) RJ-45	2	PATCH PANEL/110 BLOCK	ADMIN DATA CABLES TO BE TERMINATED ON TO DEDICATED PATCH PANELS.
UP-F	UTILITY PANEL	14	3, 15	13	(2) RJ-45 (1) F (COAX) (1) DUPLEX SC	4	PATCH PANEL, AMPS/TAPS FIBER ENCLOSURE	STATION OUTLET WILL BE LOCATED IN AV UTILITY PANEL. COORDINATE FINAL LOCATION WITH I.D. AND AV DRAWINGS
UP-2	UTILITY PANEL	14	3, 15	13	(2) RJ-45	2	PATCH PANEL	STATION OUTLET WILL BE LOCATED IN AV UTILITY PANEL. COORDINATE FINAL LOCATION WITH I.D. AND AV DRAWINGS
UP-2C	UTILITY PANEL	14	3, 15	13	(2) RJ-45 (1) F (COAX)	3	PATCH PANEL	STATION OUTLET WILL BE LOCATED IN AV UTILITY PANEL. COORDINATE FINAL LOCATION WITH I.D. AND AV DRAWINGS
UP-4	UTILITY PANEL	14	3, 15	13	(4) RJ-45	4	PATCH PANEL	STATION OUTLET WILL BE LOCATED IN AV UTILITY PANEL. COORDINATE FINAL LOCATION WITH I.D. AND AV DRAWINGS
TV	TV COAX OUTLET - PUBLIC AREAS	1	4	9	F CONNECTOR	1	AMPS AND TAPS IN CLOSET	SEE MATV INSTALLATION NOTES, COMPRESSION STYLE FITTINGS ONLY.
(DA)	DURESS ALARM	SEE COMMENT	4	NOT REQUIRED		1		FOLLOW MANUFACTURER'S INSTALLATION INSTRUCTIONS.
-(DC)	(1) DOOR CONTACT	NOT REQUIRED	4	NOT REQUIRED		1	SECURITY ENCLOSURE	
-(DC) 2	(2) DOOR CONTACT	NOT REQUIRED	4	NOT REQUIRED		2	SECURITY ENCLOSURE	
CCTV-(XX)-(XX)	CCTV CAMERA LOCATION WITH DAY/NIGHT VISION CAMERA	1	4	NOT REQUIRED	SEE CCTV SYSTEM NOTES AND RISER DIAGRAM			MD - MINI DOME-CEILING MOUNTED OR WALL MOUNTED EH - WEATHERPROOF EXTERIOR HOUSING AND VANDAL RESISTANT
CCTV-EH FIXED	CCTV CAMERA LOCATION WITH DAY/NIGHT VISION CAMERA	1	4	NOT REQUIRED	SEE CCTV SYSTEM NOTES AND RISER DIAGRAM			EH - EXTERIOR HOUSING, FIXED - WALL MOUNTED CAMERA
IC	INTERCOM UNIT	1	4	NOT REQUIRED	(1) CAT6 CABLE TO ROOM M09. CONSULT VENDOR FOR SPECIFICATIONS OF PROPOSED UNIT.			APHONE IE-SSV SYSTEM OR EQUIVALENT
CR	CARD READER	1	4	NOT REQUIRED	FOR HARD WIRED, POWERED SYSTEM-120 VAC IN ACCESSIBLE AREA IN CEILING SPACE ABOVE DOOR. SINGLE GANG BOX WITH MUD RING MOUNTED AT DOOR HANDLE HEIGHT APPROX. 8" TO 9" FROM OUTSIDE EDGE OF DOOR FRAME ON HANDLE SIDE AND 3/4" CONDUIT STUB UP TO ACCESSIBLE AREA IN CEILING SPACE.			
AIP	INTERCOM BASE STATION	1	4	9	VENDOR SPECIFIC, CONSULT VENDOR FOR SPECIFICATIONS OF PROPOSED UNIT.			APHONE AX-8MV OR EQUIVALENT
EP	WALL MOUNTED EMERGENCY PHONE STATION W/BLUE LIGHT	1	4	9	(1) RJ-45	1 (SHIELDED)		TALK-A-PHONE MODEL#: ETP-WM/E ~ ETP-400 HOMERUN ALL CABLES TO ROOM G09
MD	CEILING OR WALL MOUNTED MOTION DETECTORS	1	4	NOT REQUIRED	VENDOR SPECIFIC, CONSULT VENDOR FOR SPECIFICATIONS OF PROPOSED UNIT.			
DB	HEATH ZENITH WIRELESS BATTERY OPERATED DOOR CHIME	NOT REQUIRED	NOT REQUIRED	NOT REQUIRED				HEATH ZENITH WIRELESS BATTERY OPERATED DOOR CHIME KIT. COMES WITH CHIME AND PUSH BUTTON MODEL #: LE-6155-A
(DA)	HEATH ZENITH WIRELESS BATTERY OPERATED DOOR BELL	NOT REQUIRED	NOT REQUIRED	NOT REQUIRED				

NOTE : SOME ITEMS LISTED IN THE ABOVE TABLE MAY NOT BE INCLUDED IN THIS PROJECT. THE ABOVE ROUGH-IN REQUIREMENTS ARE INTENDED TO SERVE AS REFERENCE INFORMATION ONLY FOR TYPICAL SECURITY SYSTEM DEVICES. OTHER EQUIPMENT MANUFACTURER PRODUCTS MAY BE USED BASED UPON APPROVAL OF SUBMITTALS.

KEY NOTES FOR DEVICE REQUIREMENT SCHEDULE

KEY NOTE NNUMBER	REQUIREMENT DESCRIPTION
1	4"x4" BACK BOX WITH SINGLE GANG MUD RIN.
2	4"x4" BACK BOX WITH DOUBLE GANG MUD RING.
3	COORDINATE WITH AV DRAWINGS - IT/TV JACKS TO BE MOUNTED WITHIN AV TECH PANEL.
4	3/4" EMT CONDUIT STUBBED TO CABLE TRAY OR ACCESSIBLE CEILING SPACE CONTIGUOUS TO CABLE DESTINATION ROOM.
5	(2) 3/4" EMT CONDUITS STUBBED TO CABLE TRAY OR ACCESSIBLE CEILING SPACE CONTIGUOUS TO CABLE DESTINATION ROOM.
6	1"ø EMT CONDUIT STUBBED TO CABLE TRAY OR ACCESSIBLE CEILING SPACE CONTIGUOUS TO CABLE DESTINATION ROOM.
7	SEE CONDUIT RISER DIAGRAM FOR CONDUIT/CABLING PATHWAY REQUIREMENTS.
8	1 GANG SECTION OF FLOOR BOX - FLOOR BOX SPECIFIED BY ELECTRICAL ENGINEER.
9	120 VOLT/20 AMP DUPLEX POWER OUTLET ON DEDICATED POWER CIRCUIT WITHIN SAME STUD CAVITY.
10	120 VOLT/20 AMP DUPLEX ISOLATED GROUND POWER OUTLET WITHIN SAME STUD CAVITY.
11	120 VOLT/20 AMP DUPLEX RECEPTACLE IN FLOOR BOX.
12	NOT USED
13	120 VOLT/20 AMP DUPLEX POWER OUTLET ON DEDICATED POWER CIRCUIT WITHIN UTILITY PANEL.
14	FSR UTILITY PANEL FOR AV AND IT OUTLETS.
15	(2) 1" EMT CONDUITS STUBBED TO CABLE TRAY OR ACCESSIBLE CEILING SPACE CONTIGUOUS TO CABLE DESTINATION ROOM.

** SPECIAL SYSTEMS **

nti network technologies, inc
www.nticonsultants.com
4790 NORTH CLAYTON ST., STE. 205, LAWRENCEVILLE, GA 30040
TEL (404) 876-6033 FAX (404) 876-6034

BICSI MEMBER — REGISTERED COMMUNICATIONS DISTRIBUTION DESIGNER

THIS DRAWING IS AN INSTRUMENT OF SERVICE AND, AS SUCH, IS THE PROPERTY OF NETWORK TECHNOLOGIES, INC. (NTI). IT IS TO BE USED ONLY FOR THE PROJECT AND SITE SPECIFICALLY IDENTIFIED HEREIN. NO PART OF THIS DOCUMENT SHALL BE REPRODUCED OR TRANSMITTED IN ANY FORM OR BY ANY MEANS, ELECTRONIC OR MECHANICAL, FOR ANY PURPOSES WITHOUT THE EXPRESS WRITTEN PERMISSION OF NETWORK TECHNOLOGIES, INC. NTI JOB NO. 09-7946

Rabun Rasche Rector Reece
ARCHITECTS
44 Broad Street NW, Suite 300
Atlanta, Georgia 30303
P 404-522-9455 F 404-522-9454

This drawing is the property of Rabun Rasche Rector Reece Architects and is not to be reproduced or copied in whole or in part. It is to be used for the Project and Site specifically identified herein and is not to be used on any other project. It is to be returned upon request. Scale as stated hereon are valid on the original drawing, the size of which is 30 inches high by 42 inches long.

DOUGLASVILLE CONFERENCE CENTER
DOUGLASVILLE, GEORGIA

REVIS.	DATE	REMARKS
	03/09/10	FIRE MARSHAL
	05/14/10	PERMIT SET
	07/16/10	BID SET

SHEET TITLE: COVER SHEET

PROJECT NUMBER: 722
DATE: 03/09/10
SHEET NUMBER: DV-0-00

RELEASED FOR CONSTRUCTION

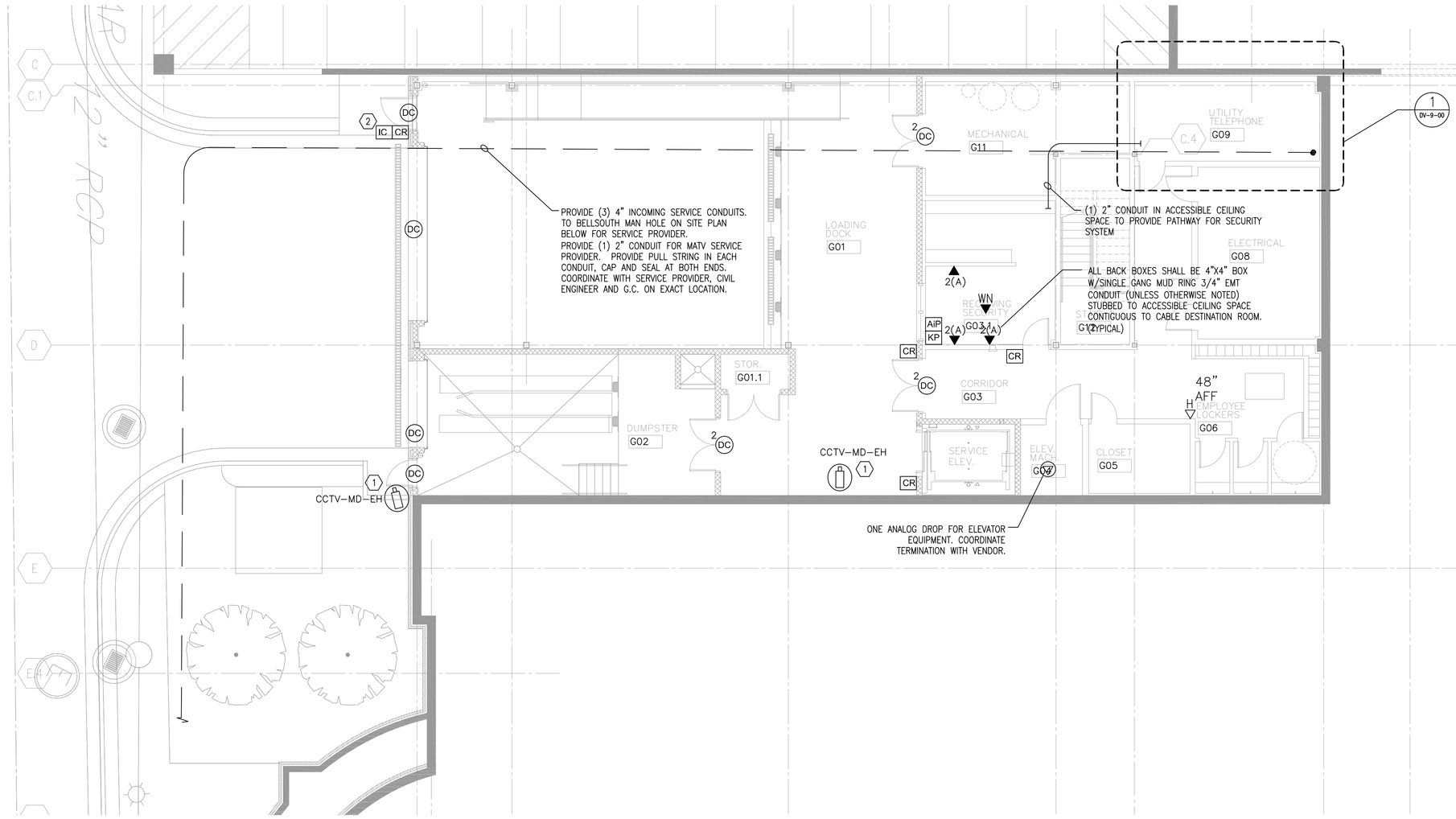

1 DV-2-00 LOADING DOCK AT GROUND LEVEL
SCALE: 1/8" = 1'-0"
2-18-2010

GENERAL NOTES:

- ALL CABLES ON THIS LEVEL SHALL BE HOMERUN TO ROOM G09.
- ALL WIRELESS NODES SHALL HAVE A 25' SERVICE LOOP.
- THE GENERAL CONTRACTOR SHALL INSTALL ALL FLOOR, WALL OUTLET BOXES AND CONDUITS FOR FLOOR/WALL OUTLET BOXES. CABLING CONTRACTOR TO FURNISH AND INSTALL VOICE AND DATA CABLING, FACEPLATES AND JACKS AS DETAILED ON DRAWINGS.
- INSTALLER IS RESPONSIBLE FOR PROVIDING ALL CABLE, CONNECTORS, CABLE MANAGEMENT HARDWARE, CROSS-CONECT, PATCH PANELS, RACKS, GROUNDING HARDWARE, J-HOOKS AND/OR MOUNTING BRACKETS, AMPS, TAPS AND ANY OTHER RELATED PRODUCTS OR HARDWARE REQUIRED TO DELIVER COMPLETED SYSTEM TO CLIENT.
- NO DRILLING, CORING OR "SHOOTING" OF FASTENERS INTO SLAB ALLOWED WITHOUT PRIOR WRITTEN CONSENT FROM STRUCTURAL ENGINEER.
- ALL CARD READERS SHALL BE MOUNTED AT DOOR KNOB HEIGHT. VERIFY ALL FINAL CARD READER SPECS & LOCATIONS WITH ARCHITECT DOOR HARDWARE SCHEDULE
- ALL OUTLETS MOUNTING HEIGHTS/DIMENSIONS SHALL BE VERIFIED/CROSS-CHECKED WITH ARCHITECTURAL/I.D. DRAWINGS
- ALL BACK BOXES SHALL BE 4"X4" BOX W/SINGLE GANG MUD RING AND 3/4" EMT CONDUIT (UNLESS OTHERWISE NOTED) STUBBED TO ACCESSIBLE CEILING SPACE CONTIGUOUS TO CABLE DESTINATION ROOM.
- ALL VOICE, DATA AND TV OUTLETS SHALL HAVE AN ELECTRICAL OUTLET WITHIN ONE STUD CAVITY. WALLPHONE AND WIRELESS NODE DO NOT REQUIRE TO HAVE AN ELECTRICAL OUTLET. FACEPLATE COLOR SHALL MATCH ELECTRICAL OR BE COORDINATED WITH INTERIOR DESIGN GROUP.
- ALL CONDUITS SHALL HAVE A PULL STRING/JETLINE FOR FUTURE USE.
- ALL CARD READERS SHALL HAVE THE CAPABILITY OF BEING UNLOCKED SIMULTANEOUSLY WITHOUT UNLATCHING UPON A SIGNAL FROM THE FIRE COMMAND CENTER.

KEY NOTES:

1. ALL CCTV CABLE SHALL BE IN CONDUIT HOMERUN BACK TO ROOM G09
2. INTERCOM WITH BUILT IN CAMERA. PROVIDE ONE CAT6 CABLE TO TO ROOM G09
3. --
4. --

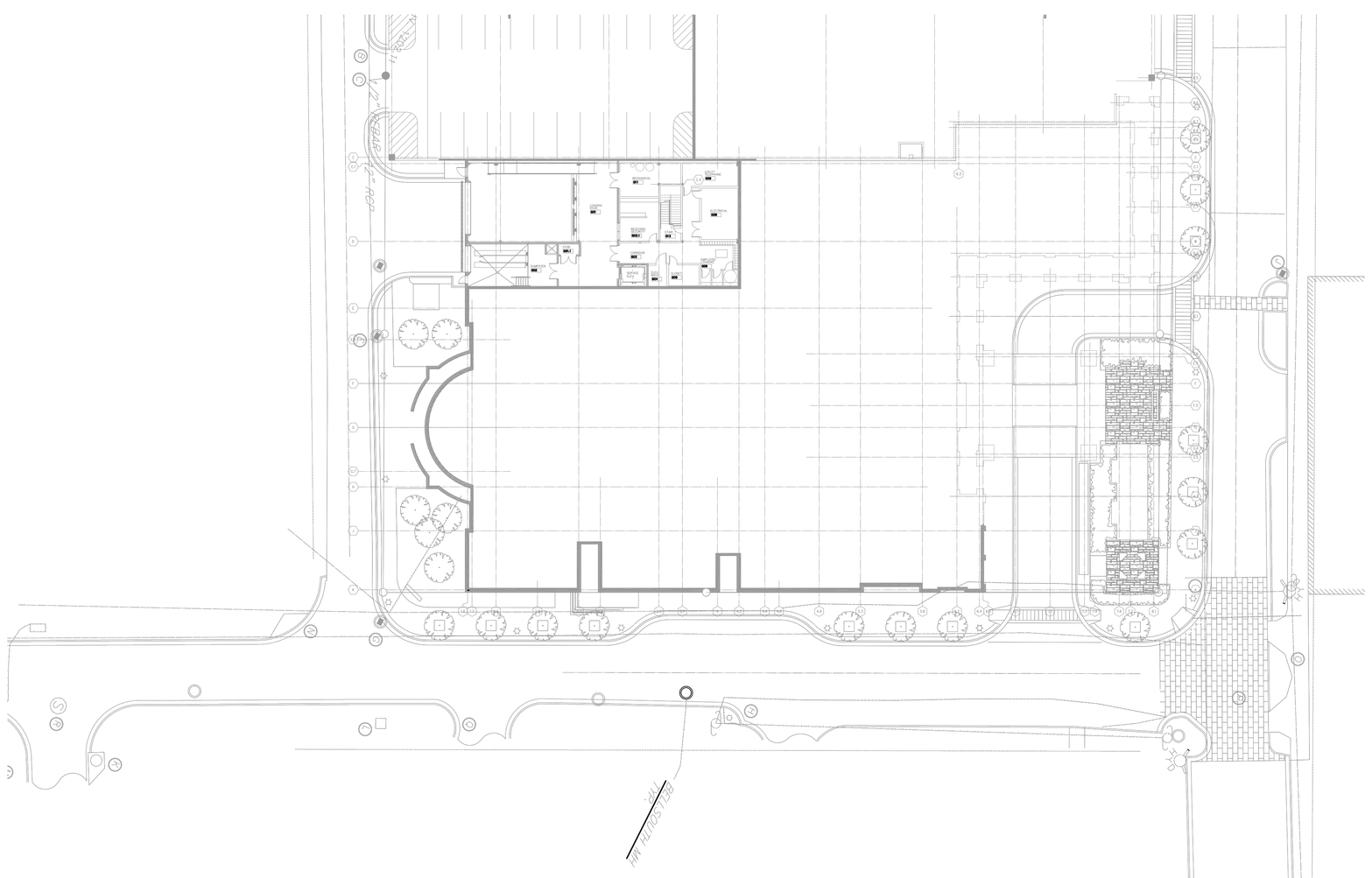

2 DV-2-00 SITE PLAN
SCALE: NTS
2-18-2010

nti network technologies, inc
www.nticonsultants.com
470 NORTH CLEVELAND ST., STE. 201, LAWRENCEVILLE, GA. 30046
TEL (404)375-0057 FAX (404)375-0059

THIS DRAWING IS AN INSTRUMENT OF SERVICE AND, AS SUCH, IS THE PROPERTY OF NETWORK TECHNOLOGIES, INC. (NTI). IT IS TO BE USED ONLY FOR THE PROJECT FOR WHICH IT WAS PREPARED AND PUBLISHED. NO PART OF THIS DOCUMENT SHALL BE REPRODUCED OR TRANSMITTED IN ANY FORM OR BY ANY MEANS, ELECTRONIC OR MECHANICAL, INCLUDING PHOTOCOPYING, WITHOUT EXPRESS WRITTEN PERMISSION OF NETWORK TECHNOLOGIES, INC.
NTI JOB NO. 09-1940

Rabun Rasche Rector Reece
ARCHITECTS
44 Broad Street NW, Suite 300
Atlanta, Georgia 30303
P 404-522-9455 F 404-522-9454

This drawing is the property of Rabun Rasche Rector Reece Architects and is not to be reproduced or copied in whole or in part. It is to be used only for the project and specifically identified herein and is not to be used on any other project. It is to be returned upon request. Scale as stated hereon are valid on the original drawing, the size of which is 30 inches high by 42 inches long.

DOUGLASVILLE CONFERENCE CENTER
DOUGLASVILLE, GEORGIA

REVIS.	DATE	REMARKS
	03/09/10	FIRE MARSHAL
	05/14/10	PERMIT SET
	07/16/10	BID SET

SHEET TITLE: LOADING DOCK AT GROUND LEVEL

PROJECT NUMBER: 722
DATE: 03/09/10
SHEET NUMBER: DV-2-00

RELEASED FOR CONSTRUCTION

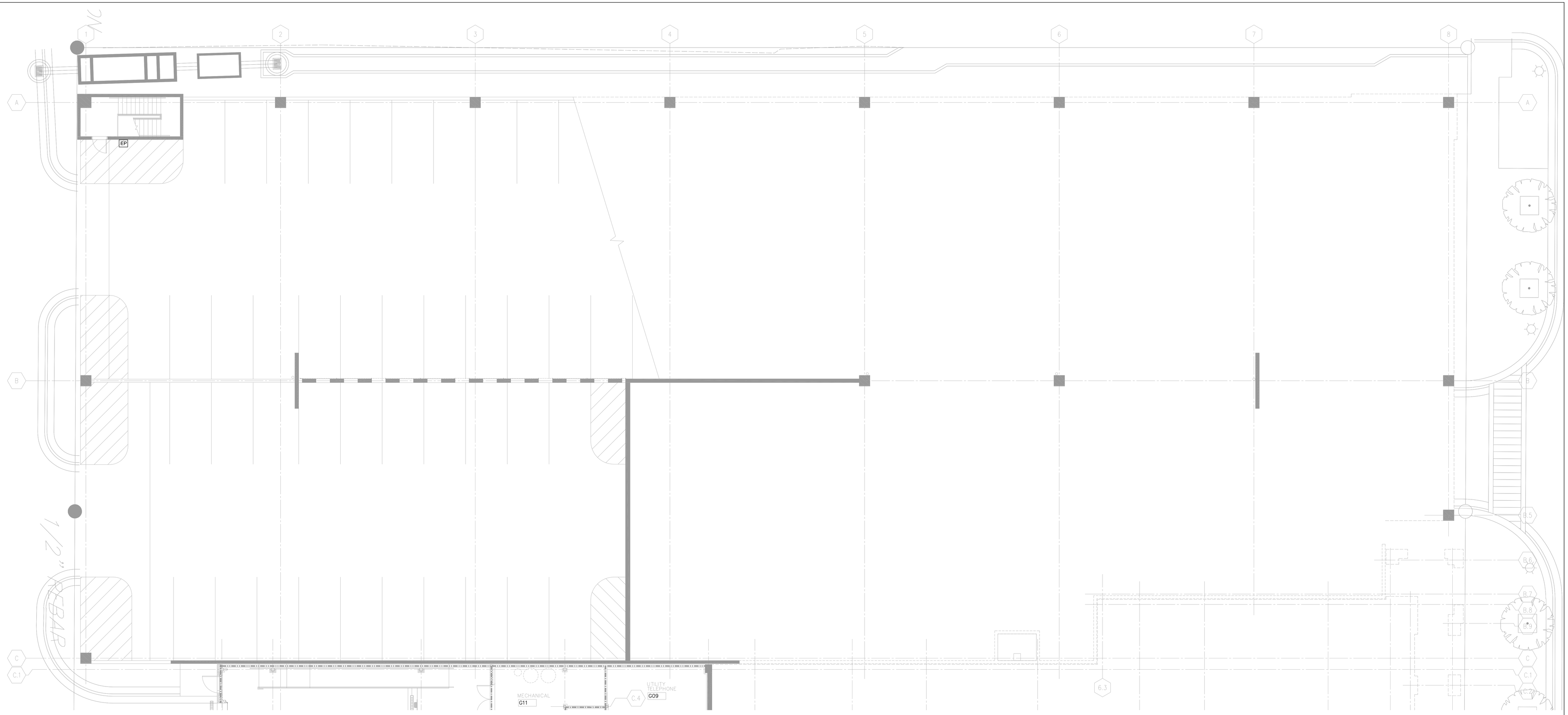

GENERAL NOTES:

- ALL CABLES ON THIS LEVEL SHALL BE HOME RUN TO ROOM G09.
- THE GENERAL CONTRACTOR WILL INSTALL ALL FLOOR, WALL OUTLET BOXES AND CONDUITS FOR FLOOR/WALL OUTLET BOXES. CABLING CONTRACTOR TO FURNISH AND INSTALL VOICE AND DATA CABLING, FACEPLATES AND JACKS AS DETAILED ON DRAWINGS.
- INSTALLER IS RESPONSIBLE FOR PROVIDING ALL CABLE, CONNECTORS, CABLE MANAGEMENT HARDWARE, CROSS-CONECT, PATCH PANELS, RACKS, GROUNDING HARDWARE, J-HOOKS AND/OR MOUNTING BRACKETS AMP, TAPS AND ANY OTHER RELATED PRODUCTS OR HARDWARE REQUIRED TO DELIVER COMPLETED SYSTEM TO CLIENT.
- NO DRILLING, CORING OR "SHOOTING" OF FASTENERS INTO SLAB ALLOWED WITHOUT PRIOR WRITTEN CONSENT FROM STRUCTURAL ENGINEER.
- ALL BACK BOXES SHALL BE 4"X4" BOX W/SINGLE GANG MUD RING 3/4" EMT CONDUIT(UNLESS OTHERWISE NOTED) STUBBED TO ACCESSIBLE CEILING SPACE CONTIGUOUS TO CABLE DESTINATION ROOM.
- ALL CONDUIT SHALL HAVE A PULL STRING/JETLINE FOR FUTURE USE.

1 / DV-2-01 GARAGE AT GROUND LEVEL
SCALE: 1/8" = 1'-0"
1-07-2010

nti
network technologies, inc
www.nticonsultants.com
170 TOWER CLUSTER CT., STE. 200, LAWRENCEVILLE, GA. 30043
TEL (404) 514-6017 FAX (404) 514-6018

THIS DRAWING IS AN INSTRUMENT OF SERVICE AND, AS SUCH, IS THE PROPERTY OF NETWORK TECHNOLOGIES, INC. (NTI). THE IDEAS, DESIGNS, ARRANGEMENTS AND SITE SPECIFICALLY ADDRESSED HEREIN, AS PART OF THIS DOCUMENT SHALL BE REPRODUCED OR TRANSMITTED IN WHOLE OR IN PART, IN ANY FORM OR BY ANY ELECTRONIC, MECHANICAL, FOR ANY PURPOSES WITHOUT THE EXPRESS WRITTEN PERMISSION OF NETWORK TECHNOLOGIES, INC.
NTI JOB NO. 09-1745

Rabun Rasche Rector Reece
ARCHITECTS
44 Broad Street NW, Suite 300
Atlanta, Georgia 30303
P 404-522-9455 F 404-522-9454

This drawing is the property of Rabun Rasche Rector Reece Architects and is not to be reproduced or copied in whole or in part. It is to be used for the Project and Site specifically identified herein and is not to be used on any other project. It is to be returned upon request. Scale as stated hereon are valid on the original drawing, the size of which is 30 inches high by 42 inches long.

DOUGLASVILLE CONFERENCE CENTER

DOUGLASVILLE, GEORGIA

REVIS.	DATE	REMARKS	REVIS.	DATE	REMARKS	REVIS.	DATE	REMARKS	REVIS.	DATE	REMARKS
	03/09/10	FIRE MARSHAL									
	05/14/10	PERMIT SET									
	07/16/10	BID SET									

SHEET TITLE

GARAGE AT GROUND LEVEL

PROJECT NUMBER 722

DATE 03/09/10

SHEET NUMBER DV-2-01

RELEASED FOR CONSTRUCTION

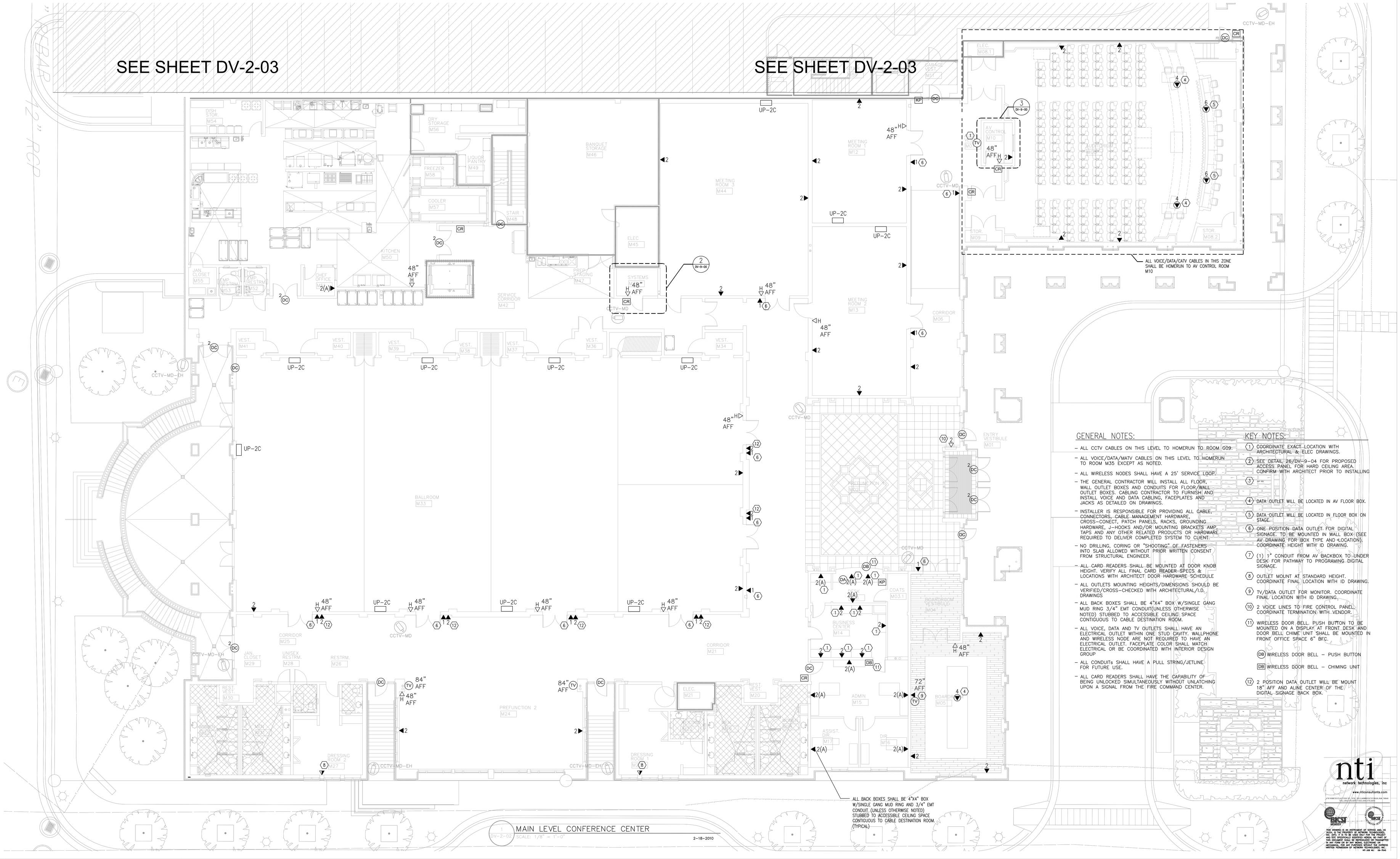

GENERAL NOTES:

- ALL CCTV CABLES ON THIS LEVEL TO HOMERUN TO ROOM G09.
- ALL VOICE/DATA/MATV CABLES ON THIS LEVEL TO HOMERUN TO ROOM M35 EXCEPT AS NOTED.
- ALL WIRELESS NODES SHALL HAVE A 25" SERVICE LOOP.
- THE GENERAL CONTRACTOR WILL INSTALL ALL FLOOR, WALL OUTLET BOXES AND CONDUITS FOR FLOOR/WALL OUTLET BOXES. CABLING CONTRACTOR TO FURNISH AND INSTALL VOICE AND DATA CABLING, FACEPLATES AND JACKS AS DETAILED ON DRAWINGS.
- INSTALLER IS RESPONSIBLE FOR PROVIDING ALL CABLE, CONNECTORS, CABLE MANAGEMENT HARDWARE, CROSS-CONECT, PATCH PANELS, RACKS, GROUNDING HARDWARE, J-HOOKS AND/OR MOUNTING BRACKETS AMP, TAPS AND ANY OTHER RELATED PRODUCTS OR HARDWARE REQUIRED TO DELIVER COMPLETED SYSTEM TO CLIENT.
- NO DRILLING, CORING OR "SHOOTING" OF FASTENERS INTO SLAB ALLOWED WITHOUT PRIOR WRITTEN CONSENT FROM STRUCTURAL ENGINEER.
- ALL CARD READERS SHALL BE MOUNTED AT DOOR KNOB HEIGHT. VERIFY ALL FINAL CARD READER-SPECS & LOCATIONS WITH ARCHITECT DOOR HARDWARE SCHEDULE
- ALL OUTLETS MOUNTING HEIGHTS/DIMENSIONS SHOULD BE VERIFIED/CROSS-CHECKED WITH ARCHITECTURAL/I.D. DRAWINGS
- ALL BACK BOXES SHALL BE 4"X4" BOX W/SINGLE GANG MUD RING 3/4" EMT CONDUIT(UNLESS OTHERWISE NOTED) STUBBED TO ACCESSIBLE CEILING SPACE CONTIGUOUS TO CABLE DESTINATION ROOM.
- ALL VOICE, DATA AND TV OUTLETS SHALL HAVE AN ELECTRICAL OUTLET WITHIN ONE STUD CAVITY. WALLPHONE AND WIRELESS NODE ARE NOT REQUIRED TO HAVE AN ELECTRICAL OUTLET. FACEPLATE COLOR SHALL MATCH ELECTRICAL OR BE COORDINATED WITH INTERIOR DESIGN GROUP
- ALL CONDUITs SHALL HAVE A PULL STRING/JETLINE FOR FUTURE USE.
- ALL CARD READERS SHALL HAVE THE CAPABILITY OF BEING UNLOCKED SIMULTANEOUSLY WITHOUT UNLATCHING UPON A SIGNAL FROM THE FIRE COMMAND CENTER.

KEY NOTES:

1. COORDINATE EXACT LOCATION WITH ARCHITECTURAL & ELEC DRAWINGS.
2. SEE DETAIL 26/DV-9-04 FOR PROPOSED ACCESS PANEL FOR HARD CEILING AREA. CONFIRM WITH ARCHITECT PRIOR TO INSTALLING
3. --
4. DATA OUTLET WILL BE LOCATED IN AV FLOOR BOX.
5. DATA OUTLET WILL BE LOCATED IN FLOOR BOX ON STAGE.
6. ONE POSITION DATA OUTLET FOR DIGITAL SIGNAGE. TO BE MOUNTED IN WALL BOX (SEE AV DRAWING FOR BOX TYPE AND LOCATION). COORDINATE HEIGHT WITH ID DRAWING.
7. (1) 1" CONDUIT FROM AV BACKBOX TO UNDER DESK FOR PATHWAY TO PROGRAMING DIGITAL SIGNAGE.
8. OUTLET MOUNT AT STANDARD HEIGHT. COORDINATE FINAL LOCATION WITH ID DRAWING.
9. TV/DATA OUTLET FOR MONITOR. COORDINATE FINAL LOCATION WITH ID DRAWING.
10. 2 VOICE LINES TO FIRE CONTROL PANEL. COORDINATE TERMINATION WITH VENDOR.
11. WIRELESS DOOR BELL. PUSH BUTTON TO BE MOUNTED ON A DISPLAY AT FRONT DESK AND DOOR BELL CHIME UNIT SHALL BE MOUNTED IN FRONT OFFICE SPACE 6" BFC.

(DB) WIRELESS DOOR BELL – PUSH BUTTON

[DB] WIRELESS DOOR BELL – CHIMING UNIT

12. 2 POSITION DATA OUTLET WILL BE MOUNT 18" AFF AND ALINE CENTER OF THE DIGITAL SIGNAGE BACK BOX.

nti
network technologies, inc
www.nticonsultants.com
470 NORTH BELLA VISTA AVE. SPA LAWRENCEVILLE GEORGIA 30045
770.339.0200 FAX 770.339.0300

THIS DRAWING IS AN INSTRUMENT OF SERVICE AND AS SUCH REMAINS THE PROPERTY OF NTI CONSULTANTS INC. NTI. IT IS TO BE USED ONLY FOR THE PROJECT AND SITE SPECIFICALLY IDENTIFIED HEREON. NO PART OF THIS DRAWING IS TO BE REPRODUCED OR TRANSMITTED IN ANY FORM OR BY ANY MEANS, ELECTRONIC OR MECHANICAL, FOR ANY PURPOSES WITHOUT THE EXPRESS WRITTEN PERMISSION OF NETWORK TECHNOLOGIES, INC.
NT JOB NO: 09-7640

Rabun Rasche Rector Reece
ARCHITECTS
44 Broad Street NW, Suite 300
Atlanta, Georgia 30303
P 404-522-9455 F 404-522-9454

This drawing is the property of Rabun Rasche Rector Reece Architects and is not to be reproduced in whole or in parts or in part. It is to be used for the Project and Site specifically identified herein and is not to be used on any other project. It is to be returned upon request. Scale as stated hereon are valid on the original drawing, the size of which is 30 inches high by 42 inches long.

DOUGLASVILLE CONFERENCE CENTER

DOUGLASVILLE, GEORGIA

REVIS.	DATE	REMARKS	REVIS.	DATE	REMARKS	REVIS.	DATE	REMARKS	REVIS.	DATE	REMARKS
	03/09/10	FIRE MARSHAL									
	05/14/10	PERMIT SET									
	07/16/10	BID SET									

SHEET TITLE

MAIN LEVEL CONFERENCE CENTER

PROJECT NUMBER 722

DATE 03/09/10

SHEET NUMBER DV-2-02

RELEASED FOR CONSTRUCTION

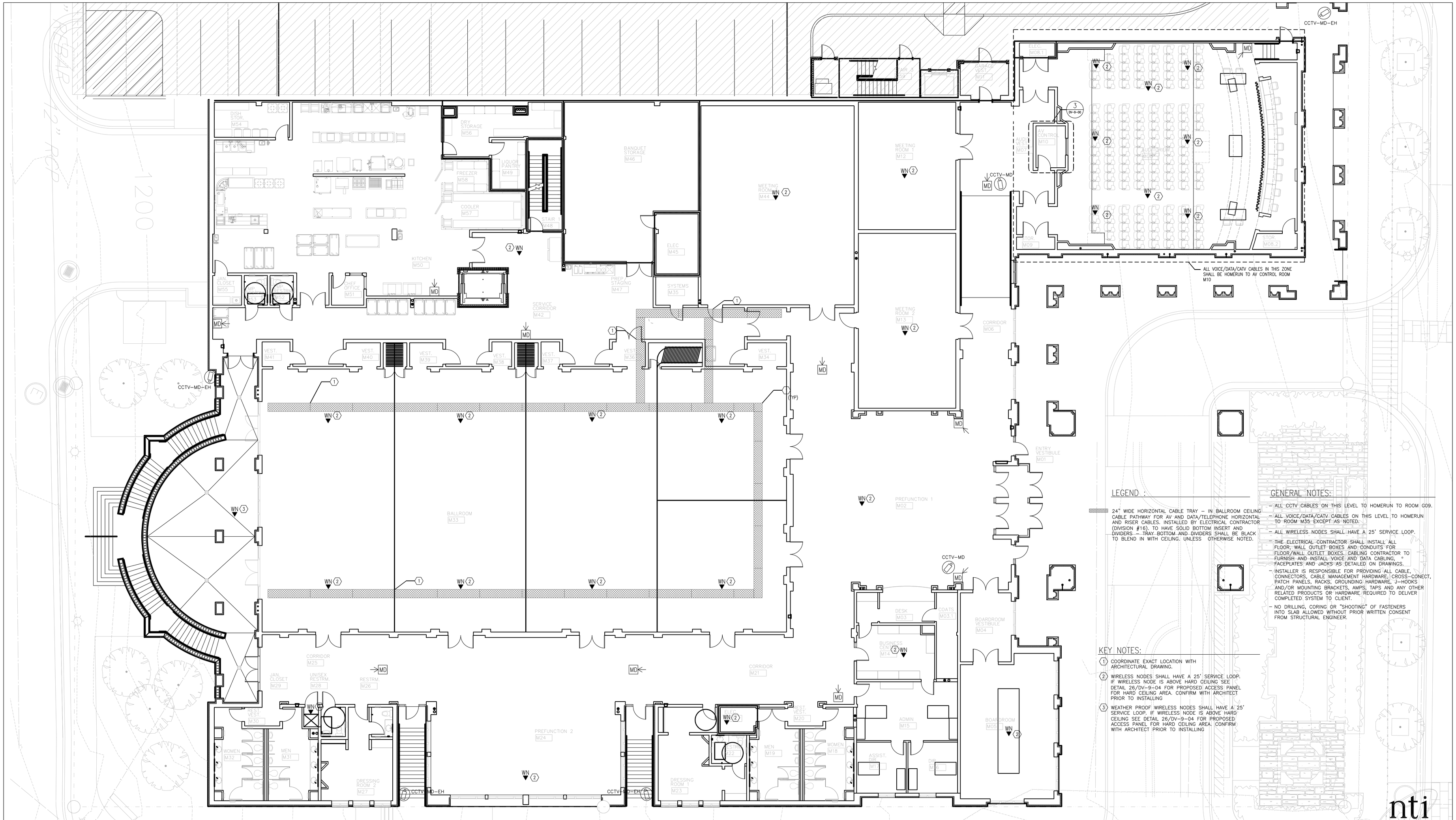

LEGEND :

24" WIDE HORIZONTAL CABLE TRAY – IN BALLROOM CEILING CABLE PATHWAY FOR AV AND DATA/TELEPHONE HORIZONTAL AND RISER CABLES. INSTALLED BY ELECTRICAL CONTRACTOR (DIVISION #16). TO HAVE SOLID BOTTOM INSERT AND DIVIDERS – TRAY BOTTOM AND DIVIDERS SHALL BE BLACK TO BLEND IN WITH CEILING, UNLESS OTHERWISE NOTED.

GENERAL NOTES:

- ALL CCTV CABLES ON THIS LEVEL TO HOMERUN TO ROOM G09.
- ALL VOICE/DATA/CATV CABLES ON THIS LEVEL TO HOMERUN TO ROOM M35 EXCEPT AS NOTED.
- ALL WIRELESS NODES SHALL HAVE A 25' SERVICE LOOP.
- THE ELECTRICAL CONTRACTOR SHALL INSTALL ALL FLOOR, WALL OUTLET BOXES AND CONDUITS FOR FLOOR/WALL OUTLET BOXES. CABLING CONTRACTOR TO FURNISH AND INSTALL VOICE AND DATA CABLING, FACEPLATES AND JACKS AS DETAILED ON DRAWINGS.
- INSTALLER IS RESPONSIBLE FOR PROVIDING ALL CABLE, CONNECTORS, CABLE MANAGEMENT HARDWARE, CROSS-CONECT, PATCH PANELS, RACKS, GROUNDING HARDWARE, J-HOOKS AND/OR MOUNTING BRACKETS, AMPS, TAPS AND ANY OTHER RELATED PRODUCTS OR HARDWARE REQUIRED TO DELIVER COMPLETED SYSTEM TO CLIENT.
- NO DRILLING, CORING OR "SHOOTING" OF FASTENERS INTO SLAB ALLOWED WITHOUT PRIOR WRITTEN CONSENT FROM STRUCTURAL ENGINEER.

KEY NOTES:

1. COORDINATE EXACT LOCATION WITH ARCHITECTURAL DRAWING.
2. WIRELESS NODES SHALL HAVE A 25' SERVICE LOOP. IF WIRELESS NODE IS ABOVE HARD CEILING SEE DETAIL 26/DV-9-04 FOR PROPOSED ACCESS PANEL FOR HARD CEILING AREA. CONFIRM WITH ARCHITECT PRIOR TO INSTALLING
3. WEATHER PROOF WIRELESS NODES SHALL HAVE A 25' SERVICE LOOP. IF WIRELESS NODE IS ABOVE HARD CEILING SEE DETAIL 26/DV-9-04 FOR PROPOSED ACCESS PANEL FOR HARD CEILING AREA. CONFIRM WITH ARCHITECT PRIOR TO INSTALLING

1 DV-2-02 MAIN LEVEL CONFERENCE CENTER – CABLE TRAY & WIRELLESS NODE LOCATIONS
SCALE: 1/8" = 1'-0"
2-18-2010

nti
network technologies, inc
www.nticonsultants.com
ENGINEERING CONSULTANTS
1950 NORTH STATE ST. STE. 104, LAWRENCEVILLE, GA. 30043
TEL(404)522-9455 FAX(404)522-9454

THIS DRAWING IS AN INSTRUMENT OF SERVICE AND, AS SUCH, IS THE PROPERTY OF NETWORK TECHNOLOGIES, INC. THE USE OF THIS DOCUMENT FOR ANY PURPOSE NOT SPECIFICALLY ASSIGNED HEREIN, NO PART OF THIS DOCUMENT SHALL BE REPRODUCED OR TRANSMITTED IN ANY FORM OR BY ANY MEANS, ELECTRONIC OR MECHANICAL, OR BY ANY INFORMATION STORAGE AND RETRIEVAL SYSTEM WITHOUT THE EXPRESS WRITTEN PERMISSION OF NETWORK TECHNOLOGIES, INC.
NTI JOB NO. 10-1765

Rabun Rasche Rector Reece
ARCHITECTS
44 Broad Street NW, Suite 300
Atlanta, Georgia 30303
P 404-522-9455 F 404-522-9454

This drawing is the property of Rabun Rasche Rector Reece Architects and is not to be reproduced or copied in whole or in part. It is to be used only for the purpose and project specifically identified herein and is not to be used on any other project. It is to be returned upon request. Scale as stated hereon are valid on original drawing, the size of which is 30 inches high by 42 inches long.

DOUGLASVILLE CONFERENCE CENTER

DOUGLASVILLE, GEORGIA

REVIS.	DATE	REMARKS	REVIS.	DATE	REMARKS	REVIS.	DATE	REMARKS	REVIS.	DATE	REMARKS
	03/09/10	FIRE MARSHAL									
	05/14/10	PERMIT SET									
	07/16/10	BID SET									

SHEET TITLE

MAIN LEVEL CONFERENCE CENTER CABLE TRAY & WIRELESS NODE LOCATIONS

PROJECT NUMBER: 722

DATE: 03/09/10

SHEET NUMBER: DV-2-02A

RELEASED FOR CONSTRUCTION

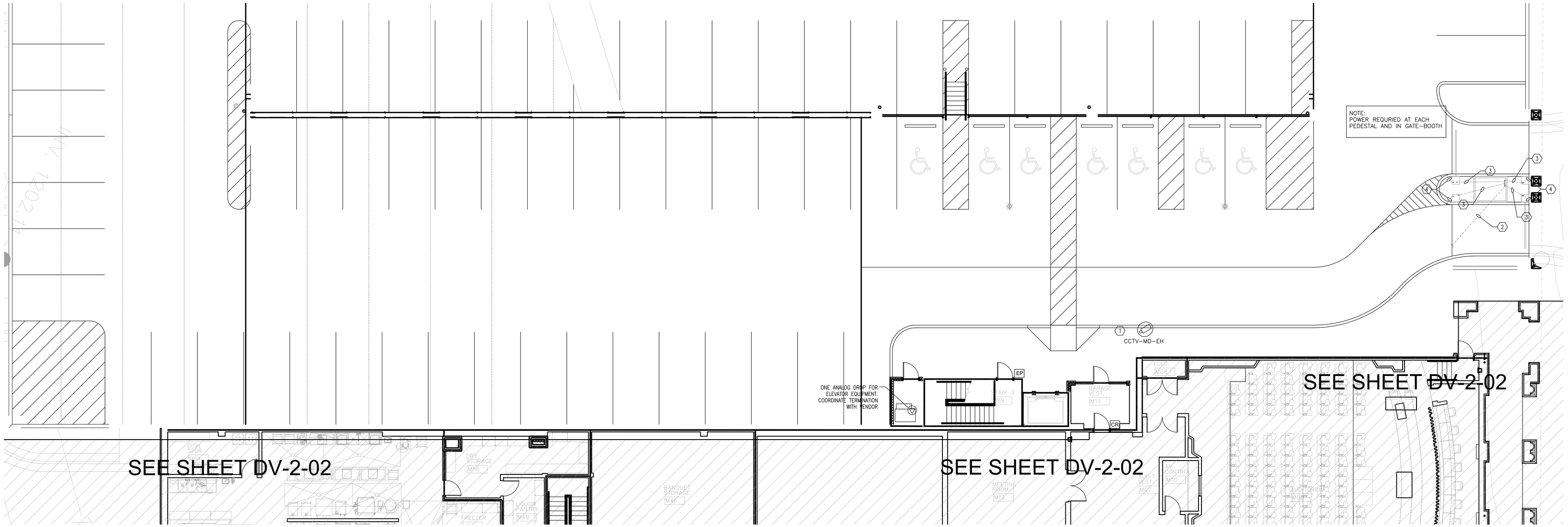

1 DV-2-03 GARAGE AT MAIN LEVEL
SCALE: 1/8" = 1'-0"
2-18-2010

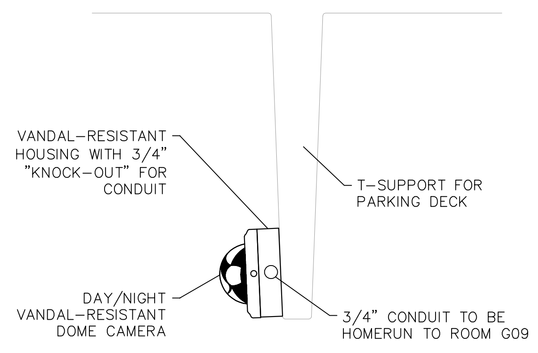

2 DV-2-03 PARKING DECK MOUNTING POSITION FOR CCTV CAMERA DETAIL
SCALE: NTS

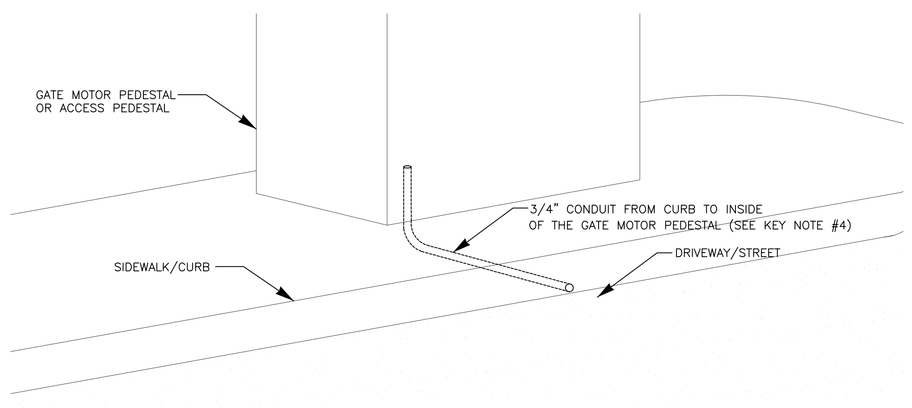

3 DV-2-03 PEDISTAL CONDUIT DETAIL
SCALE: NTS

KEY NOTES:

1. CCTV CAMERA SHALL BE MOUNTED ON THE FACE SIDE OF T-SUPPORT FOR PARKING (SEE DETIAL #2/DV2.03)
2. PROVIDE (2) 2" CONDUITS TO ROOM G09
3. PROVIDE (1) 1" CONDUITS FROM BOOTH TO PEDISTAL
4. PROVIDE (1) 3/4" CONDUITS FROM PEDISTAL TO PARK DECK. THIS IS FOR LOOP CONTROL WIRE. (SEE DETAIL 3/DV-2-03)

GENERAL NOTES:

- ALL ON THIS LEVEL SHALL BE HOME RUN TO ROOM G09.
- THE ELECTRICAL CONTRACTOR SHALL INSTALL ALL FLOOR, WALL OUTLET BOXES AND CONDUITS FOR FLOOR/WALL OUTLET BOXES. CABLING CONTRACTOR TO FURNISH AND INSTALL VOICE AND DATA CABLING, FACEPLATES AND JACKS AS DETAILED ON DRAWINGS.
- INSTALLER IS RESPONSIBLE FOR PROVIDING ALL CABLE, CONNECTORS, CABLE MANAGEMENT HARDWARE, CROSS-CONECT, PATCH PANELS, RACKS, GROUNDING HARDWARE, J-HOOKS AND/OR MOUNTING BRACKETS AMP, TAPS AND ANY OTHER RELATED PRODUCTS OR HARDWARE REQUIRED TO DELIVER COMPLETED SYSTEM TO CLIENT.
- NO DRILLING, CORING OR "SHOOTING" OF FASTENERS INTO SLAB ALLOWED WITHOUT PRIOR WRITTEN CONSENT FROM STRUCTURAL ENGINEER.
- ALL BACK BOXES SHALL BE 4"X4" BOX W/SINGLE GANG MUD RING 3/4" EMT CONDUIT(UNLESS OTHERWISE NOTED) STUBBED TO ACCESSIBLE CEILING SPACE CONTIGUOUS TO CABLE DESTINATION ROOM.
- ALL CONDUITS SHALL HAVE A PULL STRING/JETLINE FOR FUTURE USE.
- ALL CCTV CABLE SHALL BE IN CONDUIT AND HOMERUN BACK TO ROOM G09

nti
network technologies, inc
www.nticonsultants.com
470 NORTH CLEARVIEW ST., STE. 101, LAWRENCEVILLE, GA. 30045
TEL 1.866.NTI.NET1 FAX 678.419.6.Fax.Info

THIS DRAWING IS AN INSTRUMENT OF SERVICE AND, AS SUCH, IS THE PROPERTY OF NETWORK TECHNOLOGIES, INC. (NTI). IT IS TO BE USED ONLY FOR THE PROJECT AND SITE SPECIFICALLY IDENTIFIED HEREIN. NO PART OF THIS DRAWING MAY BE REPRODUCED OR TRANSMITTED IN ANY FORM OR BY ANY MEANS, ELECTRONIC OR MECHANICAL, FOR ANY PURPOSE WITHOUT THE EXPRESS WRITTEN PERMISSION OF NETWORK TECHNOLOGIES, INC.
NT JOB NO. - 06-7945

Rabun Rasche Rector Reece
ARCHITECTS
44 Broad Street NW, Suite 300
Atlanta, Georgia 30303
P 404-522-9455 F 404-522-9454

This drawing is the property of Rabun Rasche Rector Reece Architects and is not to be reproduced or copied in whole or in part. It is to be used for the Project and Site specifically identified herein and shall not be used on any other project. It is to be returned upon request. Scale as stated hereon are valid on the original drawing, the size of which is 30 inches high by 42 inches long.

DOUGLASVILLE CONFERENCE CENTER

DOUGLASVILLE, GEORGIA

REVIS.	DATE	REMARKS	REVIS.	DATE	REMARKS	REVIS.	DATE	REMARKS	REVIS.	DATE	REMARKS
	03/09/10	FIRE MARSHAL									
	05/14/10	PERMIT SET									
	07/16/10	BID SET									

SHEET TITLE
GARAGE AT MAIN LEVEL

PROJECT NUMBER 722

DATE 03/09/10

SHEET NUMBER DV-2-03

RELEASED FOR CONSTRUCTION

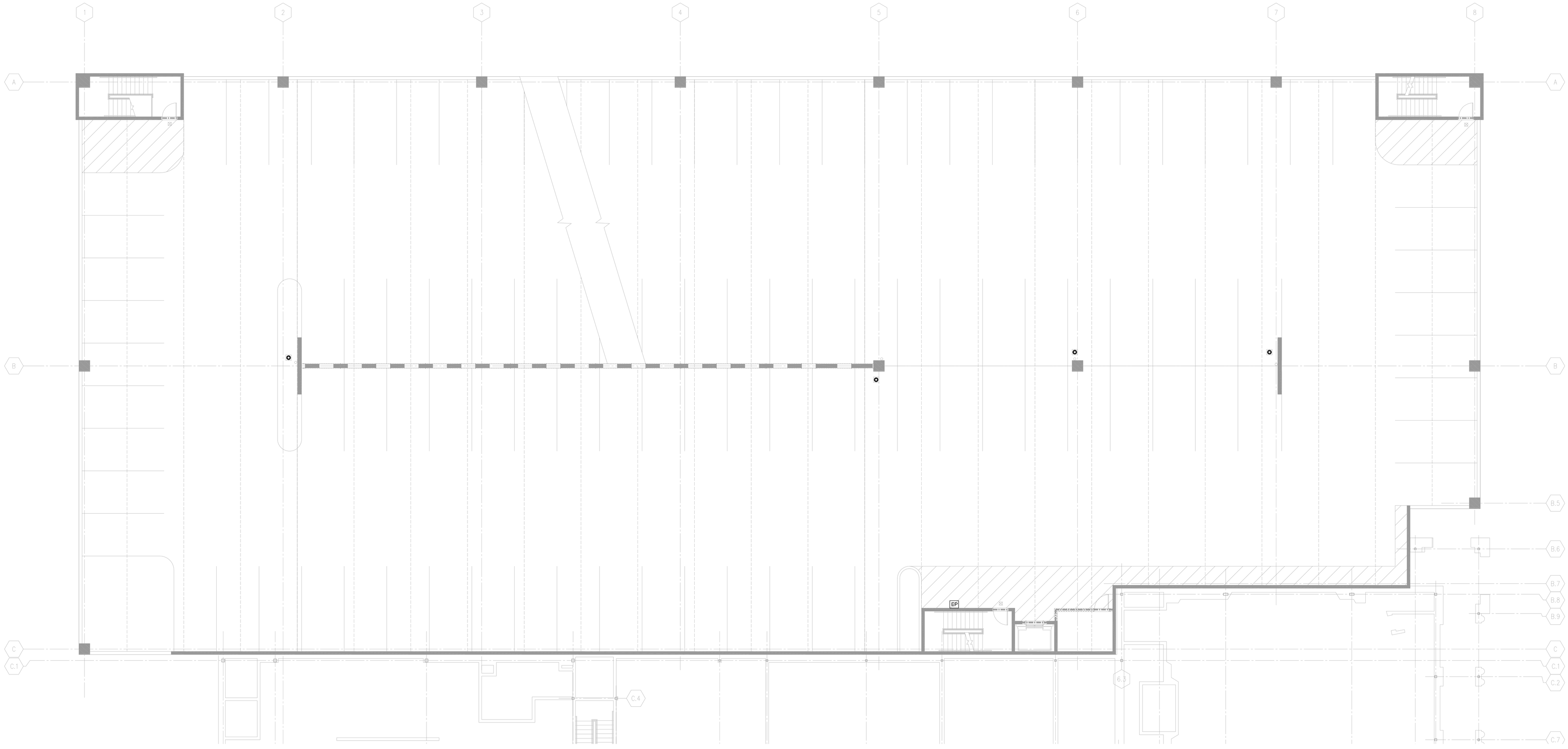

1
DV-2-04

GARAGE LEVEL 2

SCALE: 1/8" = 1'-0"

1-07-2010

GENERAL NOTES:

- ALL ON THIS LEVEL SHALL BE HOME RUN TO ROOM L09.
- THE ELECTRICAL CONTRACTOR WILL INSTALL ALL FLOOR, WALL OUTLET BOXES AND CONDUITS FOR FLOOR/WALL OUTLET BOXES. CABLING CONTRACTOR TO FURNISH AND INSTALL VOICE AND DATA CABLING, FACEPLATES AND JACKS AS DETAILED ON DRAWINGS.
- INSTALLER IS RESPONSIBLE FOR PROVIDING ALL CABLE, CONNECTORS, CABLE MANAGEMENT HARDWARE, CROSS-CONECT, PATCH PANELS, RACKS, GROUNDING HARDWARE, J-HOOKS AND/OR MOUNTING BRACKETS AMP, TAPS AND ANY OTHER RELATED PRODUCTS OR HARDWARE REQUIRED TO DELIVER COMPLETED SYSTEM TO CLIENT.
- NO DRILLING, CORING OR "SHOOTING" OF FASTENERS INTO SLAB ALLOWED WITHOUT PRIOR WRITTEN CONSENT FROM STRUCTURAL ENGINEER.
- ALL BACK BOXES SHALL BE 4"X4" BOX W/SINGLE GANG MUD RING 3/4" EMT CONDUIT(UNLESS OTHERWISE NOTED) STUBBED TO ACCESSIBLE CEILING SPACE CONTIGUOUS TO CABLE DESTINATION ROOM.
- ALL CONDUIT SHALL HAVE A PULL STRING/JETLINE FOR FUTURE USE.

nti
network technologies, inc
www.nticonsultants.com
470 NORTH CLEVELAND ST, STE. 205, LAWRENCEVILLE, GA. 30045
TEL (404) 373-8472 FAX (404) 373-8476

THIS DRAWING IS AN INSTRUMENT OF SERVICE AND, AS SUCH, REMAINS THE PROPERTY OF NETWORK TECHNOLOGIES, INC. IT IS TO BE USED ONLY FOR THE PROJECT AND SITE SPECIFICALLY IDENTIFIED HEREIN. NO PART OF THIS DRAWING MAY BE REPRODUCED OR TRANSMITTED IN ANY FORM OR BY ANY MEANS, ELECTRONIC OR MECHANICAL, FOR ANY PURPOSES WITHOUT THE EXPRESS WRITTEN PERMISSION OF NETWORK TECHNOLOGIES, INC.
NTI JOB NO. 09-7940

Rabun Rasche Rector Reece
ARCHITECTS
44 Broad Street NW, Suite 300
Atlanta, Georgia 30303
P 404-522-9455 F 404-522-9454

This drawing is the property of Rabun Rasche Rector Reece Architects and is not to be reproduced in whole or in parts or in part. It is to be used for the Project and Site specifically identified herein and is not to be used on any other project. It is to be returned upon request. Scale as stated hereon are valid on the original drawing, the size of which is 30 inches high by 42 inches long.

DOUGLASVILLE CONFERENCE CENTER

DOUGLASVILLE, GEORGIA

REVIS.	DATE	REMARKS	REVIS.	DATE	REMARKS	REVIS.	DATE	REMARKS	REVIS.	DATE	REMARKS
	03/09/10	FIRE MARSHAL									
	05/14/10	PERMIT SET									
	07/16/10	BID SET									

SHEET TITLE

GARAGE AT LEVEL 2

PROJECT NUMBER 722

DATE 03/09/10

SHEET NUMBER DV-2-04

RELEASED FOR CONSTRUCTION

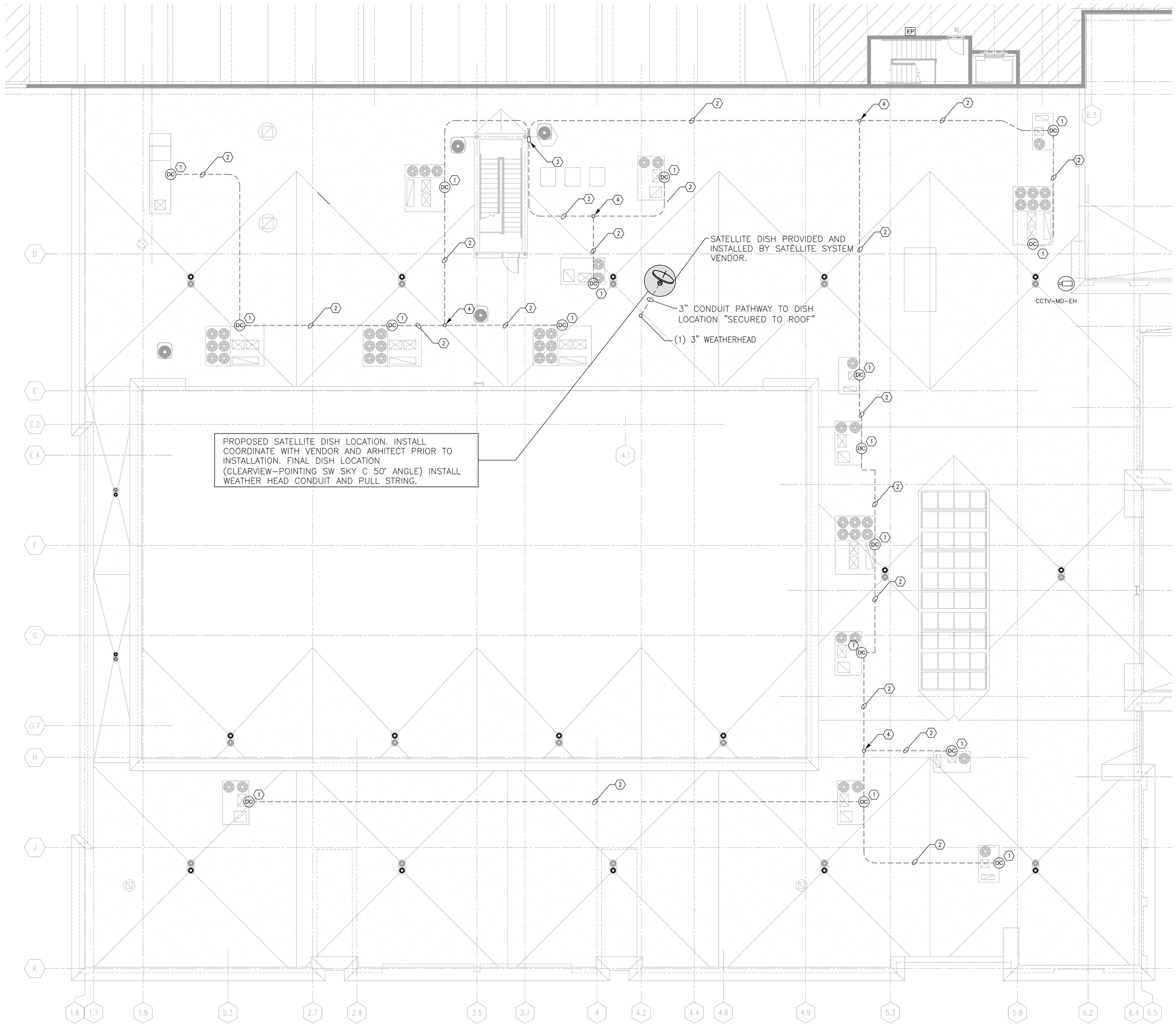

1 DV-2-05 GARAGE LEVEL 3/ROOF TOP

SCALE: 1/8" = 1'-0" 1-07-2010

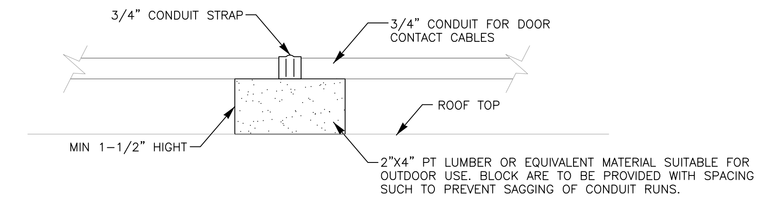

2 DV-2-05 SUGGESTED SUPPORT CONDUIT DETAIL

SCALE: NTS

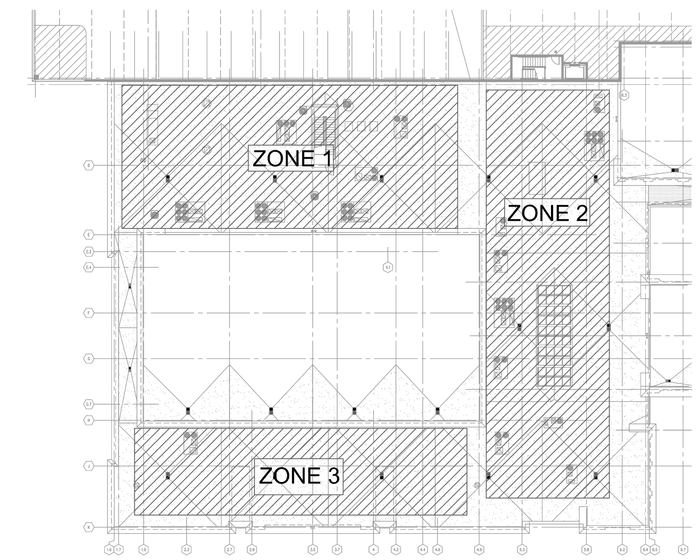

3 DV-2-05 SUGGESTED ZONING

SCALE: NTS

GENERAL NOTES:

- ALL CABLES ON THIS LEVEL SHALL BE HOME RUN TO ROOM G09.
- THE ELECTRICAL CONTRACTOR WILL INSTALL ALL FLOOR, WALL OUTLET BOXES AND CONDUITS FOR FLOOR/WALL OUTLET BOXES. CABLING CONTRACTOR TO FURNISH AND INSTALL VOICE AND DATA CABLING, FACEPLATES AND JACKS AS DETAILED ON DRAWINGS.
- INSTALLER IS RESPONSIBLE FOR PROVIDING ALL CABLE, CONNECTORS, CABLE MANAGEMENT HARDWARE, CROSS-CONECT, PATCH PANELS, RACKS, GROUNDING HARDWARE, J-HOOKS AND/OR MOUNTING BRACKETS AMP, TAPS AND ANY OTHER RELATED PRODUCTS OR HARDWARE REQUIRED TO DELIVER COMPLETED SYSTEM TO CLIENT.
- NO DRILLING, CORING OR "SHOOTING" OF FASTENERS INTO SLAB ALLOWED WITHOUT PRIOR WRITTEN CONSENT FROM STRUCTURAL ENGINEER.
- ALL BACK BOXES SHALL BE 4"X4" BOX W/SINGLE GANG MUD RING 3/4" EMT CONDUIT(UNLESS OTHERWISE NOTED) STUBBED TO ACCESSIBLE CEILING SPACE CONTIGUOUS TO CABLE DESTINATION ROOM.
- ALL CONDUIT SHALL HAVE A PULL STRING/JETLINE FOR FUTURE USE.
- SECURITY CONTRACTOR SHALL PROVIDE (3) SIGNS ABOUT THIS SPACE OF THE ROOF TOP IS BEING MONITOR.
- THIS DRAWING IS INTENDED TO COMMUNICATE DESIGN INTENT OF DOOR CONTECT IN THE MECHANICAL UNITS IN THE EVENT THAT SOMEONE TAMPER WITH THE UNIT ALARM WILL BE ACTIVED
- ALL DOOR CONTACTS FOR THE AHU ON THIS LEVEL SHALL BE DAISY CHAIN OR BE ZONED AS SHOWN IN DETAIL #3/DV-2-05. THIS IS TO MINIMIZE CABLE RUN TO ROOM G09.

------ 3/4" ROOF TOP CONDUIT - (RECOMMENDED ROUTE)

KEY NOTES:

1. COORDINATE EXACT LOCATION OF DOOR CONTACT WITH MECHANICAL DRAWING & ARCHITECTURAL DRAWING.
2. (1) 3/4" CONDUIT FOR ROOF TOP AIR HANDLER UNIT. COORDINATE FINAL LOCATION WITH GENERAL CONTRACTOR.
3. (1) 12"x12"x6" WEATHER PROOF BOX
4. (1) 4"X2" WEATHER PROOF JUNCTION BOX

nti network technologies, inc
www.nticonsultants.com
470 NORTH CLEVELAND ST, STE. 201, LAWRENCEVILLE, GA. 30045
TEL (404)375-0051 FAX (404)375-0053

THIS DRAWING IS AN INSTRUMENT OF SERVICE AND, AS SUCH, IS THE PROPERTY OF NETWORK TECHNOLOGIES, INC. NTI. IT IS TO BE USED ONLY FOR THE PROJECT FOR WHICH IT WAS PREPARED AND ITS CONTENTS OF THIS DOCUMENT SHALL NOT BE REPRODUCED OR TRANSMITTED IN ANY FORM OR BY ANY MEANS, ELECTRONIC OR MECHANICAL, WITHOUT THE PRIOR AND EXPRESS WRITTEN PERMISSION OF NETWORK TECHNOLOGIES, INC.
NTI JOB NO. 08-1945

Rabun Rasche Rector Reece
ARCHITECTS
44 Broad Street NW, Suite 300
Atlanta, Georgia 30303
P 404-522-9455 F 404-522-9454

This drawing is the property of Rabun Rasche Rector Reece Architects and is not to be reproduced or copied in whole or in part. It is to be used for the Project and Site specified herein only and is not to be used on any other project. It is to be returned upon request. Scale as stated hereon are valid on the original drawing, the size of which is 30 inches high by 42 inches long.

DOUGLASVILLE CONFERENCE CENTER

DOUGLASVILLE, GEORGIA

REVIS.	DATE	REMARKS	REVIS.	DATE	REMARKS	REVIS.	DATE	REMARKS	REVIS.	DATE	REMARKS
	03/09/10	FIRE MARSHAL									
	05/14/10	PERMIT SET									
	07/16/10	BID SET									

SHEET TITLE

GARAGE LEVEL 3

PROJECT NUMBER 722

DATE 03/09/10

SHEET NUMBER DV-2-05

RELEASED FOR CONSTRUCTION

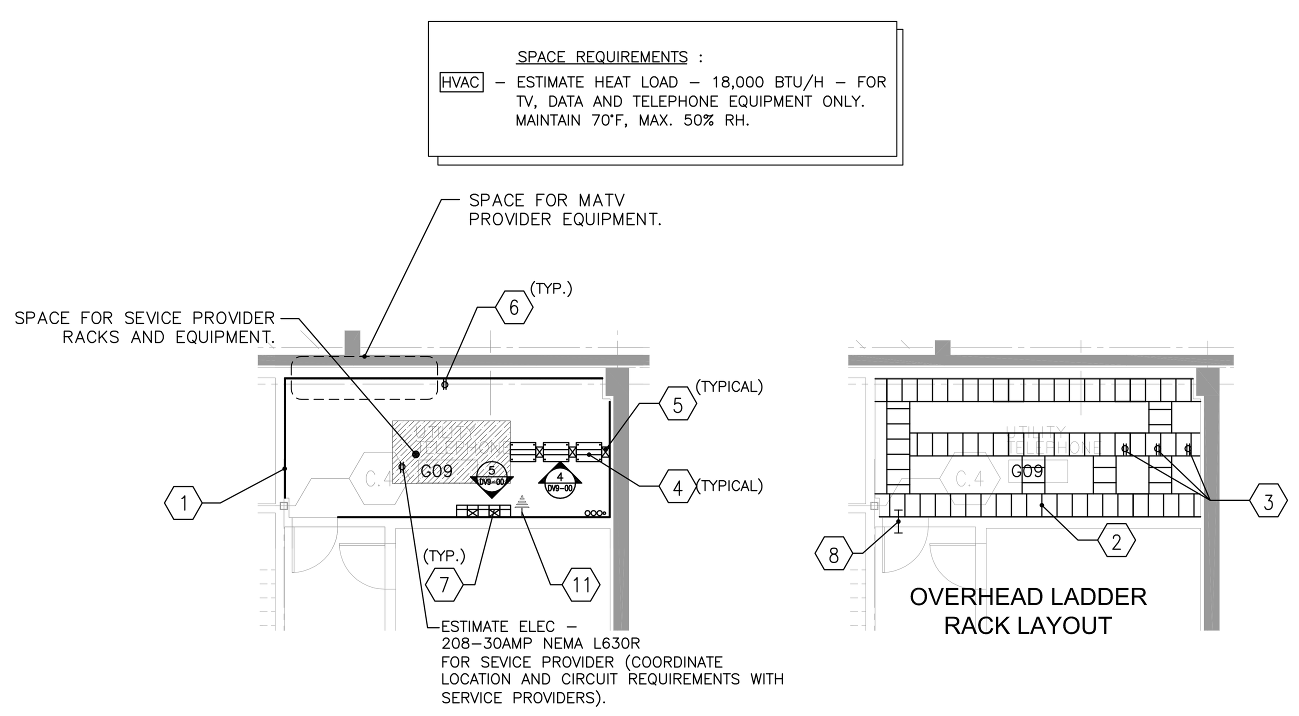

1 DV-9-00 UTILITY TELEPHONE G09
SCALE: NTS

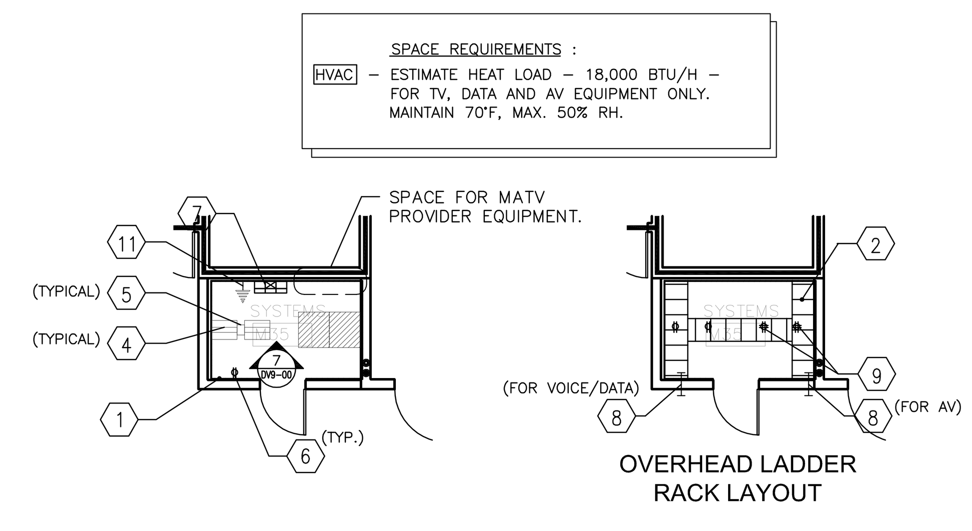

2 DV-9-00 SYSTEMS ROOM M35
SCALE: NTS

KEY NOTES:

1. 3/4" AC GRADE PLYWOOD, 8 FOOT HIGH 6"AFF, ON ALL WALLS. FIRE RATED OR TREATED ON ALL SIDES WITH TWO COATS OF FIRE RESISTANT PAINT (ON ALL SIDES). IF FIRE RATED PLYWOOD IS USED, PAINT WITH A LIGHT GRAY AFTER IT HAS BEEN INSPECTED BY LOCAL CODE ENFORCEMENT. (SEE GENERAL NOTE #13)
2. 18" BLACK LADDER RACK WITH SUPPORT BRACKET. MOUNT AT 7'-6"AFF TO BOTTOM OF LADDER RACK OR 6" ABOVE CABINETS OR RACKS.
3. PROVIDE (1) 110 AC 20AMP DEDICATED CIRCUITS, ISOLATED GROUND DUPLEX FOR PBX AND DATA RACK. COORDINATE RECEPTACLE TYPE WITH PBX VENDOR.
4. FLOOR MOUNTED EQUIPMENT RELAY RACK, 7'(H)x19"(W), BLACK, (CPI # 55053-703) OR APPROVED EQUIVALENT.
5. VERTICAL CABLE MANAGER (CPI #40095-703) WITH HINGED COVER OR APPROVED EQUIVALENT.
6. 120VAC, 20 AMP DUPLEX CONVENIENCE OUTLET AT 6'-0" INTERVALS AROUND PERIMETER OF ROOM.
7. 300 PAIR 110 DISTRIBUTION FRAME AND VERT. CABLE MANAGER FRAME FOR BACKBONE/STATION CABLES.
8. (3) 4" SLEEVES ABOVE CABLE TRAY. BY CABLING CONTRACTOR.
9. (4) DEDICATED 120V 20 AMP CIRCUITS EACH WITH A SINGLE OUTLET.
10. (2) 120V AC/20 AMP DUPLEX RECEPTACLE DEDICATED CIRCUITS ON EMERGENCY POWER.
11. DEDICATED TELECOM GROUND BUS BAR (SEE DETAIL X/DV90X).
12. RACK SPACE FOR OWNER PROVIDED EQUIPMENT.
13. SWING GATE WALL RACK. CPI PART # 11791-X25
14. MONITOR SHELF WITH KEYBOARD AND MOUSE TRAY. CPI PART #12487-719
15. DOUBLE SIDED SHELF. CPI PART #40108-719

LAN CLOSET INSTALLATION NOTES

1. THE LAN COMPUTER/TEL. ROOM SHALL HAVE APPROPRIATE NUMBER OF EQUIPMENT RACKS 1. INSTALLED AS PER DRAWINGS. RACKS SHALL BE CPI # 46753-703 OR EQUIVALENT. FLOOR RACKS MUST BE FASTENED TO CONCRETE FLOOR, AND FASTENED TO LADDER RACK WITH PROPER CPI HARDWARE. ALL RACKS AND FRAMES SHALL BE INSTALLED ACCORDING TO ALL APPLICABLE LOCAL BUILDING CODES.
2. CONTRACTOR TO INSTALL PANELS IN SUFFICIENT QUANTITY AND PORT CONFIGURATION TO TERMINATE ALL INCOMING HORIZONTAL DATA CABLES AND TELEPHONE PATCH SYSTEM CABLES. ADMIN. OUTLET DATA CABLES TO BE TERMINATED ON DEDICATED PATCH PANELS.
3. EQUIPMENT RACKS MUST BE SUPPORTED OVERHEAD WITH 18" WIDE X 6" DEEP CABLE TRAY FROM RACKS TO WALL ACCORDING TO PLANS AND DRAWING DETAILS. CABLE TRAY TO BE MP HUSKY OR EQUIVALENT. LADDER RACK MAY BE USED IN IDF ROOMS WITH CEILINGS LESS THAN 8'-0". MAINTAIN A MINIMUM OF 18" CLEARANCE FROM ANY OVERHEAD SPRINKLER SYSTEMS.
4. VERTICAL WIRE MANAGEMENT SHALL BE CPI #30095-703, TO BE USED BETWEEN EACH RACK AND ON ENDS OF RACK(S).
5. HORIZONTAL WIRE MANAGEMENT, 2 RACK UNITS (3.5"), TO BE USED BETWEEN EACH PATCH PANEL, ABOVE THE TOP PANEL AND BELOW THE BOTTOM PANEL FOR EACH PANEL LINEUP.
6. A 70" CPI POWER STRIP WITH A MINIMUM OF 10 OUTLETS SHALL BE FASTENED VERTICALLY TO THE REAR OF CPI RACKS TO PROVIDE POWER TO EQUIPMENT. ELECTRICAL CONTRACTOR IS RESPONSIBLE FOR THE INSTALLATION OF POWER RECEPTACLES. COORDINATE INSTALLATION OF POWER SUPPLY CIRCUITS WITH ELECTRICAL CONTRACTOR. ONE CIRCUIT PER RACK IS REQUIRED. ELECTRICAL CONTRACTOR TO STRAP CONDUIT TO UNDERSIDE OF LADDER RACK WITH PROPER INSTALLATION METHOD AND HARDWARE. POWER CABLES FROM EQUIPMENT RACK TO WALL OUTLETS WILL NO BR PERMITTED.
7. ALL "IDF" AND "MDF" CROSS-CONNECT FIELDS SHALL BE OF THE 110 TYPE BLOCKS IN A SUFFICIENT QUANTITY TO FULLY TERMINATE ALL HORIZONTAL VOICE CABLES. VERTICAL CROSS-CONNECT CABLE MANAGEMENT TROUGHS MANUFACTURED BY THE SAME MANUFACTURER AS THE 110 BLOCKS MUST BE USED BETWEEN 110 BLOCKS AND VERTICAL BLOCK ARRAYS. D-RINGS WILL NOT BE PERMITTED FOR CABLE MANAGEMENT IN THE 110 BLOCK FIELD. REAR CABLE TROUGH TYPE ARRANGEMENT IS REQUIRED FOR THE 110 BLOCKS. REAR FEED AND CABLE DRESSING IN THE CABLE TROUGHS IS REQUIRED FOR ALL CABLE, BOTH WORKSTATION AND RISERS.
8. ALL EQUIPMENT RACKS AND HARDWARE MUST BE GROUNDED PER TIA/EIA AND NEC GUIDELINES.

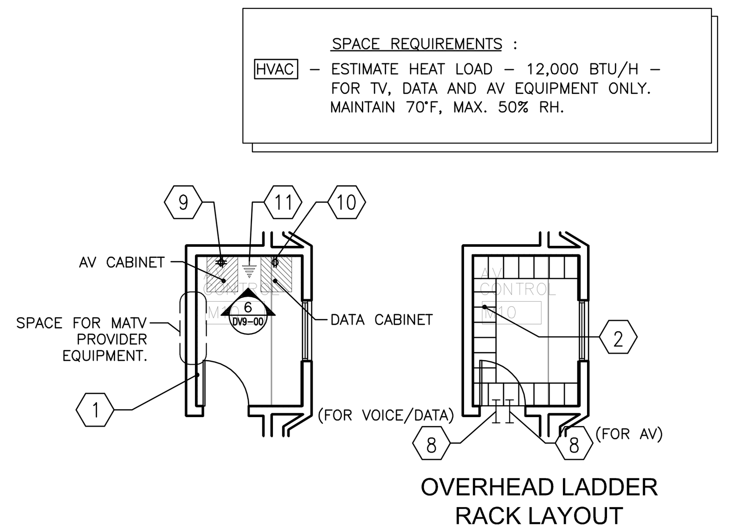

3 DV-9-00 AV CONTROL ROOM M10
SCALE: NTS

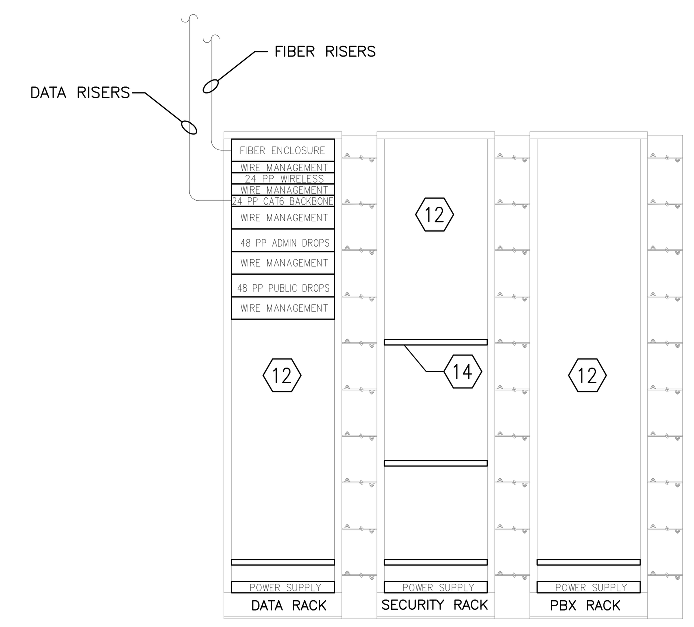

4 DV-9-00 UTILITY TELEPHONE G09–RACK ELEVATIONS
SCALE: NTS

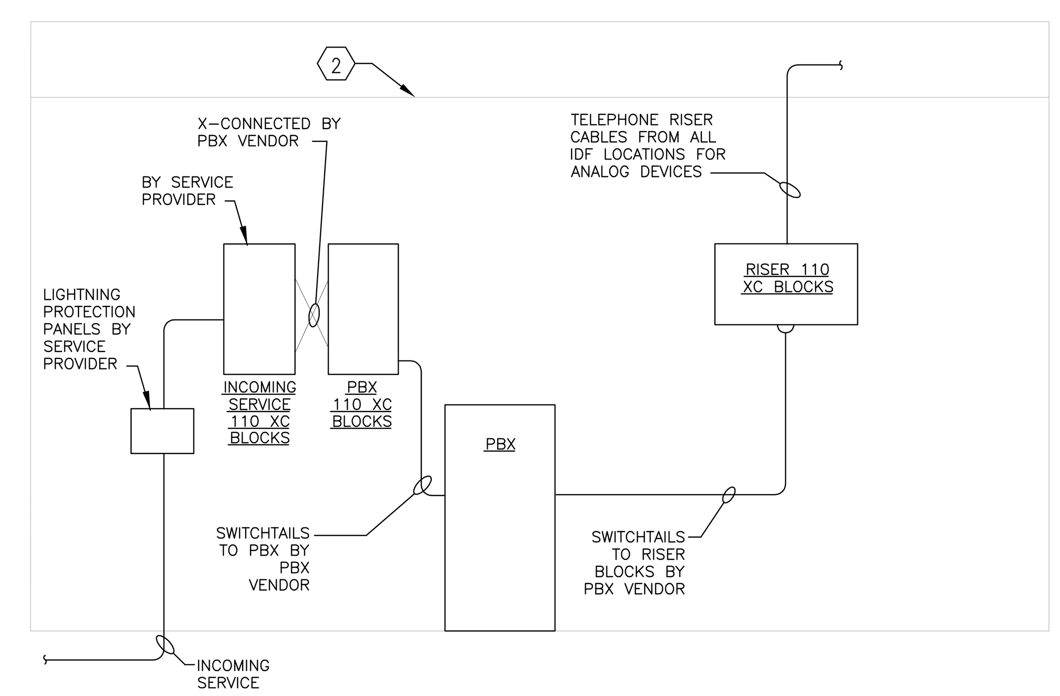

5 DV-9-00 UTILITY TELEPHONE G09–BACKBOARD DETAIL
SCALE: NTS

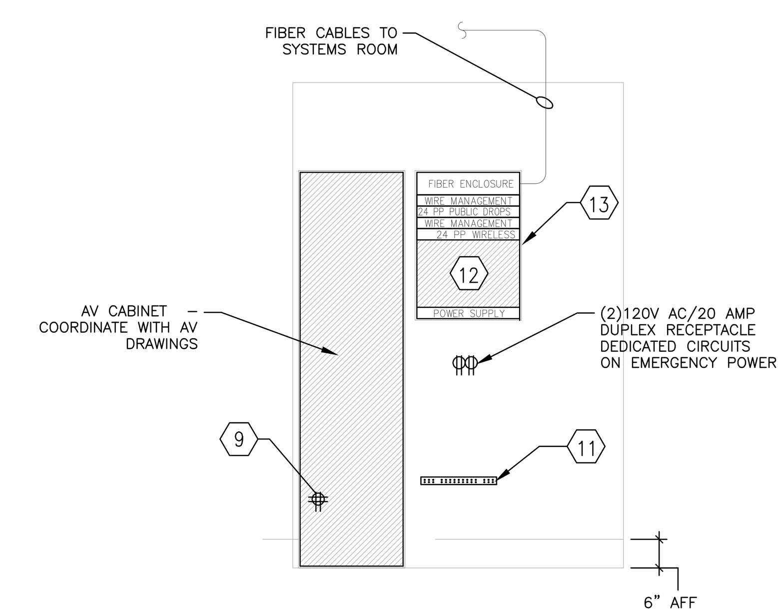

6 DV-9-00 AV CONTROL ROOM ELEVATIONS
SCALE: NTS

GENERAL NOTES:

1.) HEAT LOADS LISTED HEREIN REPRESENT KNOWN LOADS FOR DATA/TELEPHONE SYSTEM EQUIPMENT IN RESPECTIVE ROOMS AT TIME OF DESIGN. MECHANICAL SYSTEMS DESIGNER SHOULD VERIFY HEAT LOADS WITH OTHER DESIGNERS FOR SHARING EQUIPMENT SPACES. MECHANICAL SYSTEMS ARE TO BE SIZED BY MECHANICAL ENGINEER AND SPECIFIED ON MECHANICAL DRAWINGS.
2.) HVAC SYSTEMS FOR EQUIPMENT ROOMS TO BE DEDICATED SYSTEMS WHEREVER FEASIBLE. WHERE NOT FEASIBLE, ROOMS TO BE ON DEDICATED ZONE WITH INDEPENDENT THERMOSTAT CONTROL.
3.) ALL EQUIPMENT ROOMS SHALL HAVE :
   - NO CEILING TILES.
   - NON-STATIC VINYL TILE OR SEALED CONCRETE FLOOR (NO CARPET).
   - NO SPRINKLER HEADS (IF FEASIBLE).
   - MINIMUM 3'-0" WIDE DOOR.
   - ACCESSIBLE FROM ELEVATOR OR DOCK (NO STAIR ACCESS) WITH MINIMUM 3'-6" WIDE ACCESS PATHWAY.
   - NO WATER LEAK POTENTIAL SPACES ABOVE (POOL, KITCHEN, BATHROOM, ETC.).
4.) RACK ELEVATIONS ARE SHOWN FOR REFERENCE ONLY. INSTALLER IS RESPONSIBLE FOR PROVIDING ALL CABLE, CONNECTORS, CABLE MANAGEMENT HARDWARE, PATCH PANELS, RACKS AND/OR MOUNTING BRACKETS AMP/TAPS AND ANY OTHER RELATED PRODUCTS OR HARDWARE REQUIRED TO DELIVER COMPLETED SYSTEM TO CLIENT.
5.) POWER OUTLET(S) ON DRAWING ARE FOR REFERENCE ONLY. SYSTEM SHALL BE DESIGN BY ELECTRICAL ENGINEER AND SPECIFIED ON ELECTRICAL DRAWING. IF ADDITION POWER IS REQUIRED. COORDINATE WITH ELECTRICAL ENGINEER FOR QTY, TYPE AND LOCATION.
6.) ALL GUESTROOM VOICE/DATA/MATV CABLE TO BE HOMERUN TO APPROPRIATE IDF ROOM ON LEVEL AS INDICATED ON FLOOR PLANS AND CABLING RISER DIAGRAM.
7.) ALL MATV CABLE RUNS THAT EXCEED 150' SHALL BE RUN WITH RG-11 CABLE.
8.) ALL MATV CABLE SHALL BE TERMINATED WITH COMPRESSION-TYPE CONNECTORS
9.) CABLING CONTRACTOR IS RESPONSIBLE FOR PROVIDING AND INSTALLING ALL PRODUCTS, AS REQUIRED, TO FURNISH OWNER WITH COMPLETE SYSTEM.
10.) NOT USED
11.) NOT UESD
12.) INSTALLER IS RESPONSIBLE FOR PROVIDING ALL CABLE, CONNECTORS, CABLE MANAGEMENT HARDWARE, PATCH PANELS, RACKS AND/OR MOUNTING BRACKETS AMP/TAPS AND ANY OTHER RELATED PRODUCTS OR HARDWARE REQUIRED TO DELIVER COMPLETED SYSTEM TO CLIENT.
13.) DO NOT MOUNT PLYWOOD DIRECTLY TO A CONCRETE OR BLOCK WALL. PROVIDE 7/8" FURRING CHANNEL AT 2' CENTER, AND MOUNT PLYWOOD ON FURRING CHANNEL.
14.) ALL OUTSIDE PLANT CONDUITS SHALL BE INSTALLED AT A MINIMUM DEPTH OF 30" BELOW GRADE.
15.) SERVICE CONDUITS SHALL BE STUBBED INTO ROOM G09, IDENTIFIED AT BOTH ENDS, CAPPED AND SEALED AT RIGHT-OF-WAY. COORDINATED WITH EXACT LOCATION WITH CIVIL AND SERVICE PROVIDER. (INSTALLED BY GC.)

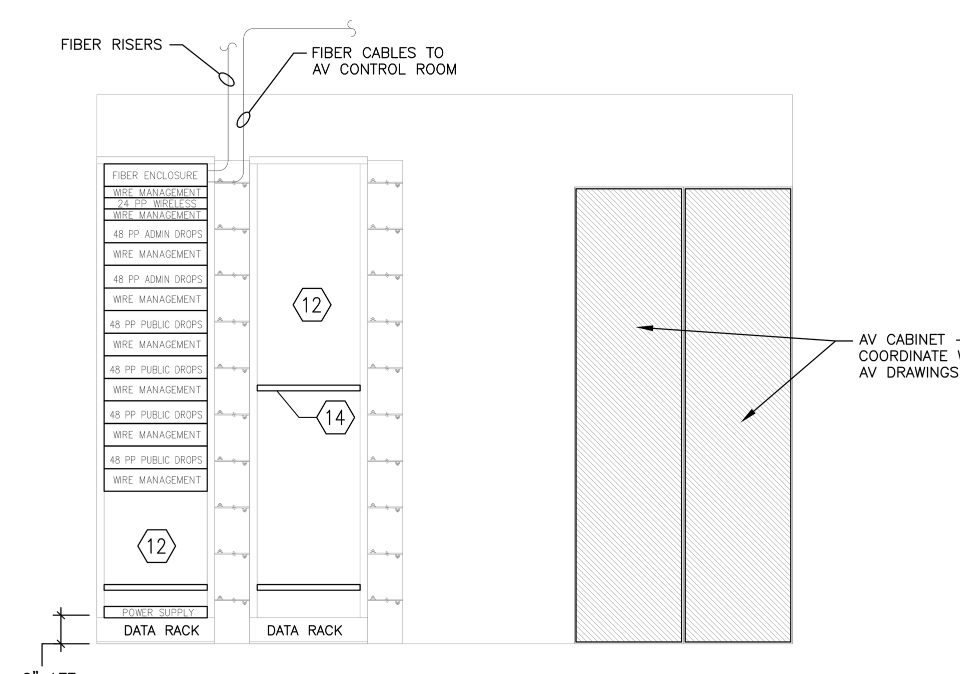

7 DV-9-00 SYSTEMS ROOM M10 – RACK ELEVATIONS
SCALE: NTS

nti network technologies, inc
www.nticonsultants.com

Rabun Rasche Rector Reece ARCHITECTS
44 Broad Street NW, Suite 300
Atlanta, Georgia 30303
P 404-522-9455 F 404-522-9454

This drawing is the property of Rabun Rasche Rector Reece Architects and is not to be reproduced or copied in whole or in part. It is to be used for the Project and Site specifically identified herein and is not to be used on any other project. It is to be returned upon request. Scale as stated hereon are valid on the original drawing, the size of which is 30 inches high by 42 inches long.

DOUGLASVILLE CONFERENCE CENTER
DOUGLASVILLE, GEORGIA

REVIS.	DATE	REMARKS
	03/09/10	FIRE MARSHAL
	05/14/10	PERMIT SET
	07/16/10	BID SET

SHEET TITLE: EQUIPMENT ROOM DETAILS
PROJECT NUMBER: 722
DATE: 03/09/10
SHEET NUMBER: DV-9-00

RELEASED FOR CONSTRUCTION

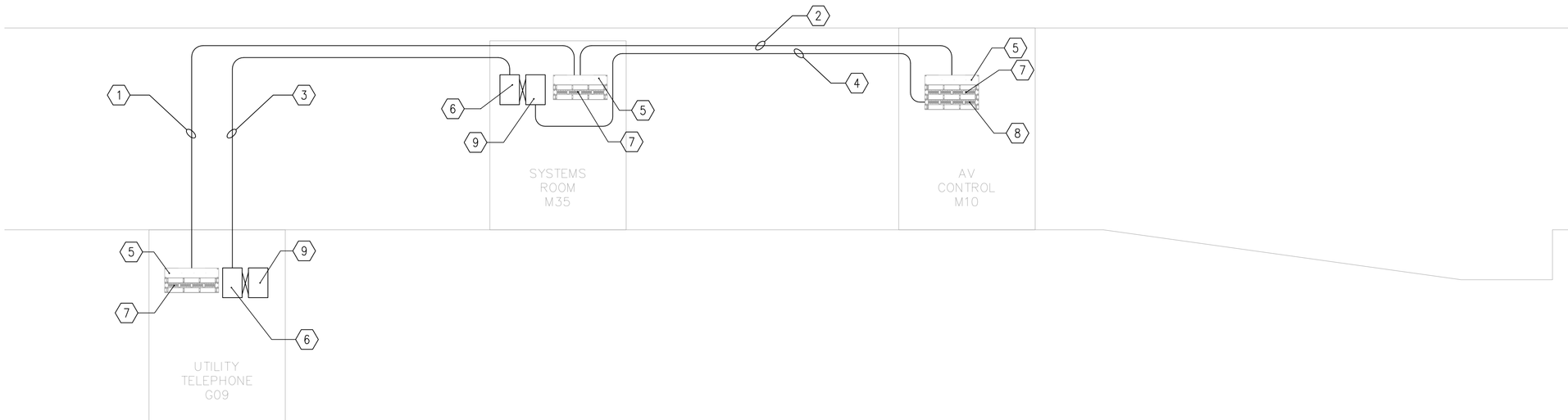

1 DV-9-02 COPPER, DATA AND FIBER RISER DIAGRAM
SCALE: NTS

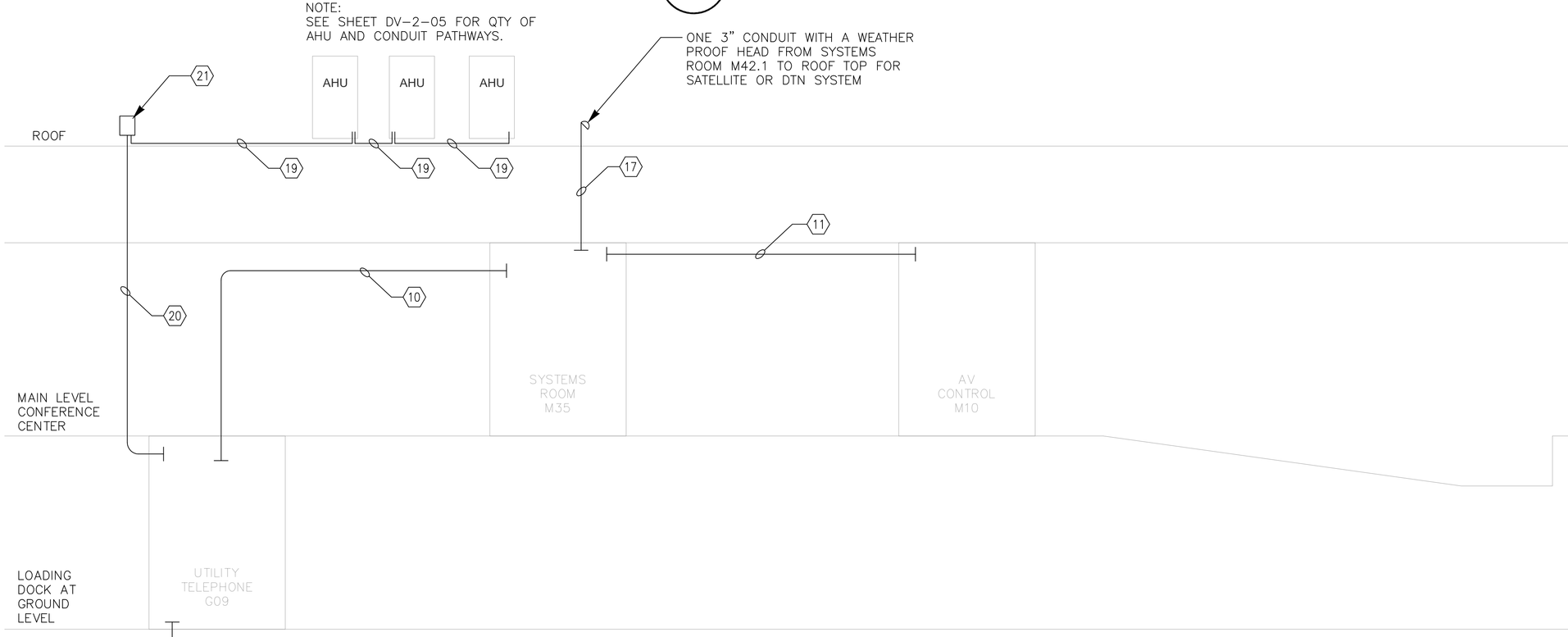

2 DV-9-02 CONDUIT RISER DIAGRAM
SCALE: NTS

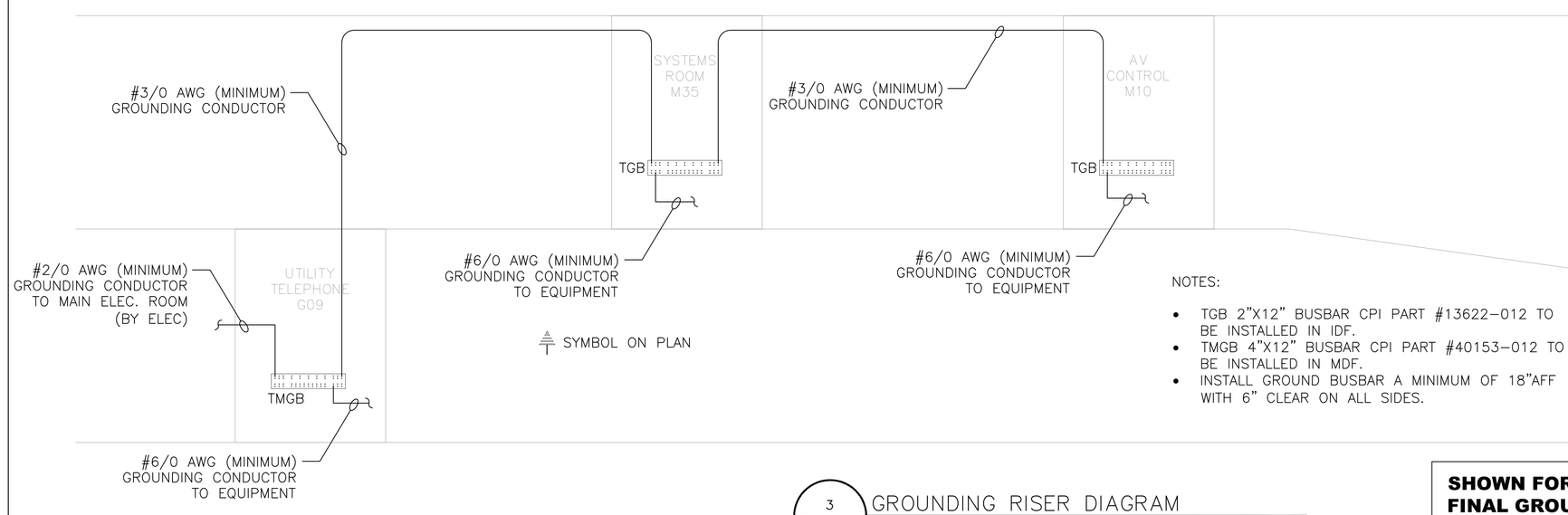

NOTES:

- TGB 2"X12" BUSBAR CPI PART #13622-012 TO BE INSTALLED IN IDF.
- TMGB 4"X12" BUSBAR CPI PART #40153-012 TO BE INSTALLED IN MDF.
- INSTALL GROUND BUSBAR A MINIMUM OF 18"AFF WITH 6" CLEAR ON ALL SIDES.

3 DV-9-02 GROUNDING RISER DIAGRAM
SCALE: NTS

SHOWN FOR REFERENCE ONLY - VERIFY FINAL GROUNDING SYSTEM DESIGN WITH ELECTRICAL ENGINEER.

GENERAL NOTES:

1. ALL EMT CONDUITS, OUTLET BOXES AND SLEEVES TO BE INSTALLED BY GENERAL CONTRACTOR. ALL EMT CONDUITS TO BE INSTALLED WITH PULL STRINGS AND LABELED ON BOTH ENDS WITH DESTINATION.
2. CONDUIT RUNS SHALL CONTAIN NO MORE THAN TWO (2) 90 DEGREE BENDS AND HAVE AN AGGREGATE BEND OF NO MORE THAN 180' WITHOUT A PULL BOX. PULL BOXES SHALL BE INSTALLED IN STRAIGHT CONDUIT SECTIONS ONLY.
3. ALL CONDUIT STUBS SHALL BE REAMED AND BUSHED.
4. LABEL ALL CONDUIT ENDS WITH DESTINATION.
5. ALL CONDUITS SHALL CONTAIN PULL STRING.
6. ALL CONDUITS TO BE ROUTED OVERHEAD, NOT UNDERGROUND OR BELOW GROUND FLOOR SLAB EXCEPT FOR INCOMING SERVICE CONDUITS.
7. INSTALLER IS RESPONSIBLE FOR PROVIDING ALL CABLE, CONNECTORS, CABLE MANAGEMENT HARDWARE, PATCH PANELS, CROSS-CONNECTS, RACKS, GROUNDING HARDWARE AND/OR MOUNTING BRACKETS, AMPS/TAPS AND ANY OTHER RELATED PRODUCTS OR HARDWARE REQUIRED TO DELIVER COMPLETED SYSTEM TO CLIENT.
8. VOICE CROSS-CONNECT (FROM STATION TO FEEDERS) IN ROOM M35 SHALL BE DONE BY CABLE INISTALLER. CROSS CONNECTS FROM PBX TO FEEDER CABLES IN ROOM G09 SHALL BE DONE BY PBX VENDOR.
9. ALL MATV CABLES SHALL BE TERMINATED WITH COMPRESSION-TYPE CONNECTIRS.
10. ANY CABLES THAT ARE ROUTED THROUGH ON GRADE OR BELOW GRADE CONDUITS SHALL BE INDOOR/OUTOOR RATED.
11. NO DRILLING, CORING OR "SHOOTING" OF FASTENERS INTO SLAB ALLOWED WITHOUT PRIOR WRITTEN CONSENT FROM STRUCTURAL ENGINEER.
12. RACK ELEVATIONS ARE SHOWN FOR REFERENCE ONLY. CABLING CONTRACTOR IS RESPONSIBLE FOR VERIFYING AND PROVIDING APPROPRIATE NUMBER OF PANELS AS NECESSARY TO TERMINATE ALL HORIZONTAL AND RISER CABLES WITHIN EACH IDF AND UTILITY ROOM.

KEY NOTES:

1. (1) 24 STRAND 50/125 MM OPTIC FIBER. (12) CAT-6 BACKBONE CABLES
2. (1) 12 STRAND 50/125 MM OPTIC FIBER. (12) CAT-6 BACKBONE CABLES
3. 100 PR-24 AWG CAT 3, UTP-CMP RATED
4. 50 PR-24 AWG CAT 3, UTP-CMP RATED CABLES TWO PAIR PER PORT FOR DAIL-TONE PATCH PANEL.
5. FIBER OPTIC ENCLOSURE WITH SC PANEL AND DATA PATCH PANEL
6. 110 BLOCK FOR VOICE BACKBONE
7. PATCH PANEL FOR DATA BACKBONE CABLES
8. DAIL-TONE PATCH PANEL
9. 110 BLOCK FOR STATION CABLES
10. (3) 4" CONDUITS & (1) 2" CONDUIT
11. (1) 4" CONDUITS & (1) 2" CONDUIT
12. #6 GREEN GROUND WIRE. ONE PER RACK. BY CABLE CONTRACTOR.
13. TMGB 4"X12" BUSBAR CPI PART #40153-012. INSTALL GROUND BUSBAR A MINIMUM OF 18"AFF WITH 6" CLEAR ON ALL SIDES. BY CABLE CONTRACTOR.
14. TGB 2"X12" BUSBAR CPI PART #13622-012. INSTALL GROUND BUSBAR A MINIMUM OF 18"AFF WITH 6" CLEAR ON ALL SIDES. BY CABLE CONTRACTOR.
15. (2) RG-11 MATV BACKBONE CABLES.
16. SPACE FOR TAPS & AMPS. PROVIDE AND INSTALLED BY CABLING CONTRACTOR
17. (1) 3" CONDUIT TO ROOF TOP WITH A WEATHERPROOF HEAD. COORDINATE EXACT LOCATION WITH GC & ARCHITECTURAL DRAWING.
18. (4) RG-11 MATV BACKBONE CABLES.
19. (1) 3/4" EMT CONDUIT FOR ROOF TOP AIR HANDER UNIT. COORDINATE FINAL LOCTION WITH GENERAL CONTRACTOR. (SEE DV-2-05 FOR RECOMMENDED ROUTE)
20. (1) 2" CONDUIT FROM WEATHER PROOF BOX TO ROOM G09. THIS WILL BE A VERTICAL CONDUIT FROM ROOF TOP AND SHALL BE STUBBED INTO THE TELECOM ROOM G09
21. (1) 12"x12"x6" WEATHER PROOF BOX

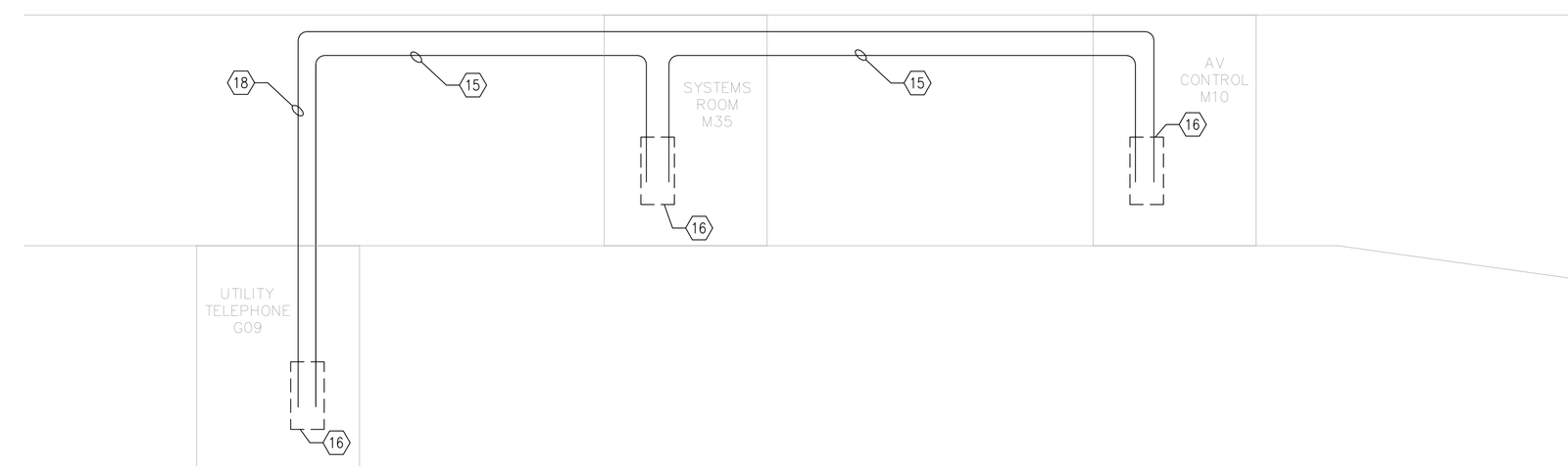

4 DV-9-02 MATV RISER DIAGRAM
SCALE: NTS

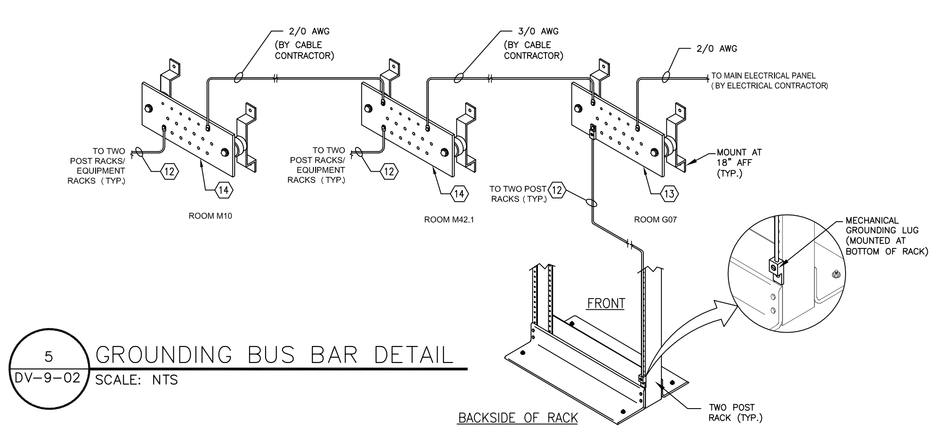

5 DV-9-02 GROUNDING BUS BAR DETAIL
SCALE: NTS

Rabun Rasche Rector Reece
ARCHITECTS
44 Broad Street NW, Suite 300
Atlanta, Georgia 30303
P 404-522-9455 F 404-522-9454

This drawing is the property of Rabun Rasche Rector Reece Architects and is not to be reproduced in whole or in part. It is to be used for the Project and Site specifically identified herein and is not to be used on any other project. It is to be returned upon request. Scale as stated hereon are valid on the original drawing, the size of which is 30 inches high by 42 inches long.

DOUGLASVILLE CONFERENCE CENTER

DOUGLASVILLE, GEORGIA

REVIS.	DATE	REMARKS
	03/09/10	FIRE MARSHAL
	05/14/10	PERMIT SET
	07/16/10	BID SET

SHEET TITLE

TELEPHONE/DATA/MATV/CATV CONDUIT RISER DIAGRAM

PROJECT NUMBER 722

DATE 03/09/10

SHEET NUMBER DV-9-02

nti network technologies, inc
www.nticonsultants.com
470 NORTH LEXINGTON ST., STE. 205, LAWRENCEVILLE, GA. 30045
TEL (404) 373-8052 FAX (404) 373-8109

THIS DRAWING IS AN INSTRUMENT OF SERVICE AND, AS SUCH, REMAINS THE PROPERTY OF NTI NETWORK TECHNOLOGIES, INC. IT IS TO BE USED ONLY FOR THE PROJECT AND SITE SPECIFICALLY IDENTIFIED HEREIN. NO PART OF THIS DRAWING MAY BE REPRODUCED OR TRANSMITTED IN ANY FORM OR BY ANY MEANS, ELECTRONIC OR MECHANICAL, FOR ANY PURPOSES WITHOUT THE EXPRESS WRITTEN PERMISSION OF NETWORK TECHNOLOGIES, INC.
NTI JOB NO. 09-7940

RELEASED FOR CONSTRUCTION

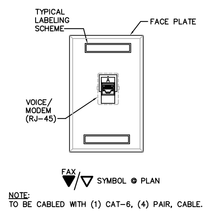

1 DV-9.04 1 POSITION VOICE OUTLET
NOT TO SCALE

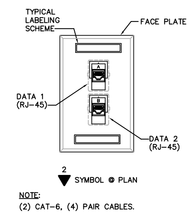

2 DV-9.04 2 POSITION DATA OUTLET
NOT TO SCALE

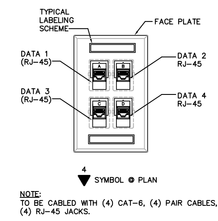

3 DV-9.04 4 POSITION DATA OUTLET
NOT TO SCALE

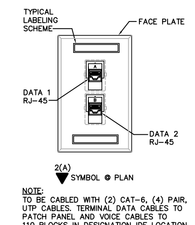

4 DV-9.04 2 POSITION DATA/VOICE OUTLET ADMINISTRATION
NOT TO SCALE

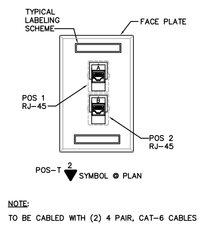

5 DV-9.04 2 – POINT OF SALE (POS) TERMINAL OUTLET
NOT TO SCALE

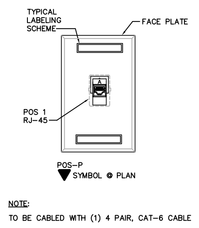

6 DV-9.04 POINT OF SALE (POS) PRINTER OUTLET
NOT TO SCALE

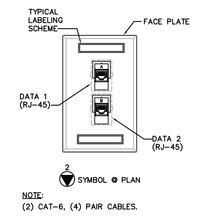

7 DV-9.04 2 POSITION DATA OUTLET FLOOR MOUNTED
NOT TO SCALE

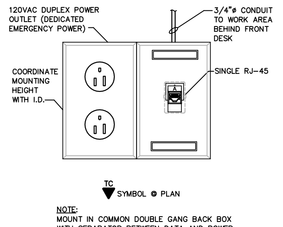

8 DV-9.04 TIME CLOCK OUTLET
NOT TO SCALE

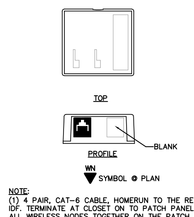

9 DV-9.04 WIRELESS NETWORK DATA PORT
NOT TO SCALE

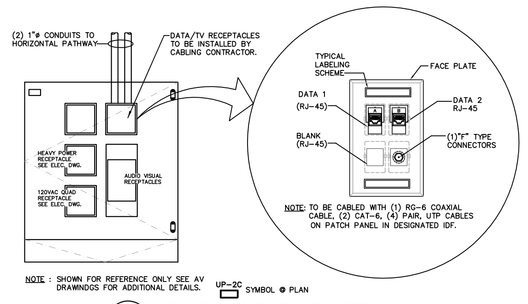

10 DV-9.04 UP–2C UTILITY PANEL DETAIL
NOT TO SCALE

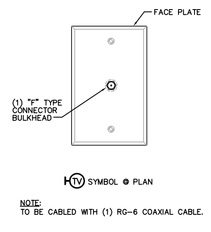

11 DV-9.04 TELEVISION OUTLET
NOT TO SCALE

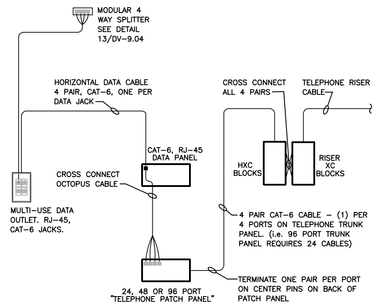

12 DV-9.04 TELEPHONE DIALTONE PATCHING SYSTEM
NOT TO SCALE

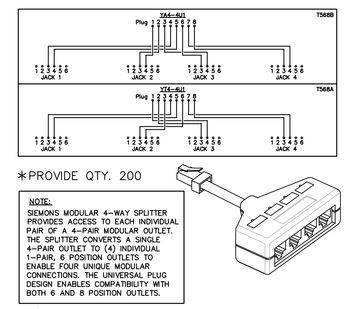

13 DV-9.04 SIEMONS MODULAR 4–WAY SPLITTER
NOT TO SCALE

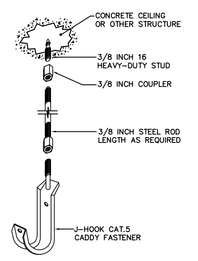

14 DV-9.04 WORKSTATION CABLE SUPPORT
NOT TO SCALE

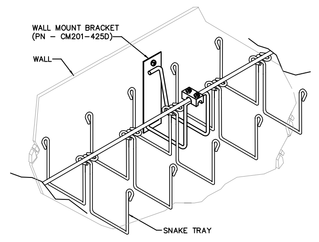

DOUBLE CHANNEL SNAKE TRAY CEILING
15 DV-9.04 WALL HANGER ASSEMBLY
NOT TO SCALE

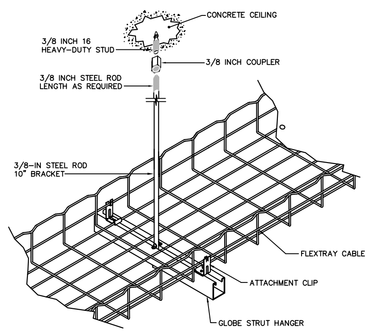

16 DV-9.04 FLEXTRAY CEILING HANGER ASSEMBLY
NOT TO SCALE

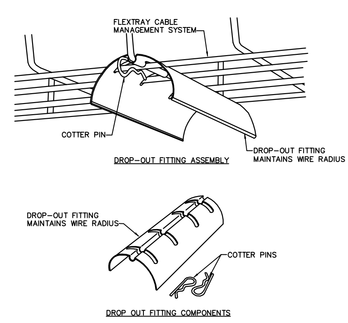

17 DV-9.04 FLEXTRAY DROP–OUT FITTING ASSEMBLY
NOT TO SCALE

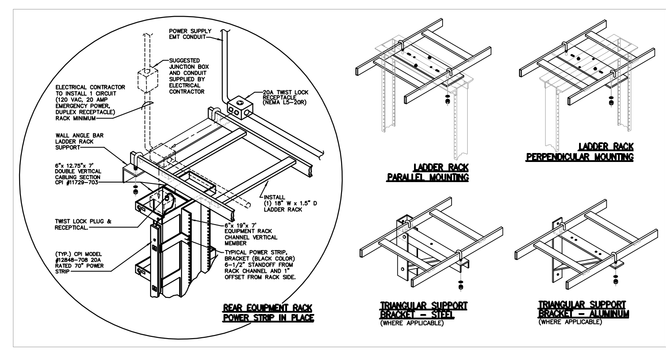

18 DV-9.04 LADDER RACK DETAILS
NOT TO SCALE (TYP. TO IDF LOCATIONS)

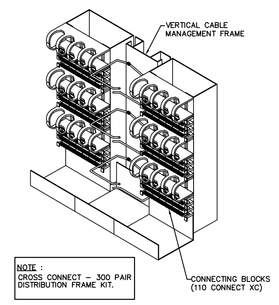

19 DV-9.04 110 CROSS–CONNECT DETAIL
NOT TO SCALE

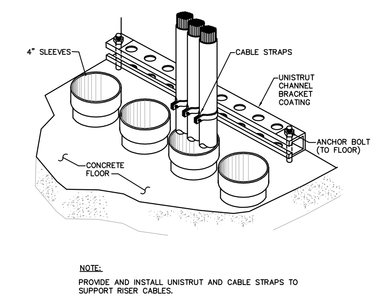

20 DV9.04 UNISTRUT CHANNEL BRACKET DETAIL
NOT TO SCALE

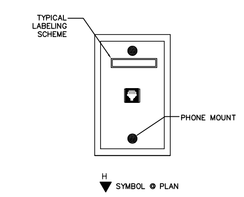

21 DV9.04 WALL PHONE VOICE OUTLET
NOT TO SCALE

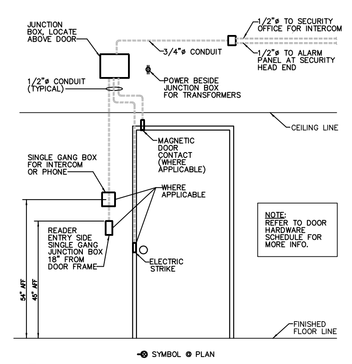

22 DV-9.04 SINGLE DOOR CONDUIT ELEVATION
NOT TO SCALE FOR DOOR CONTACT, CARD READER, INTERCOM OR PHONE AND REMOTE DOOR RELEASE.

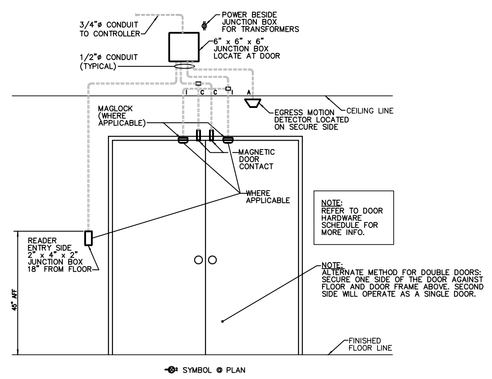

23 DV-9.04 DOUBLE DOOR CONDUIT ELEVATION
NOT TO SCALE FOR DOOR CONTACT, CARD READER, INTERCOM OR PHONE AND REMOTE DOOR RELEASE.

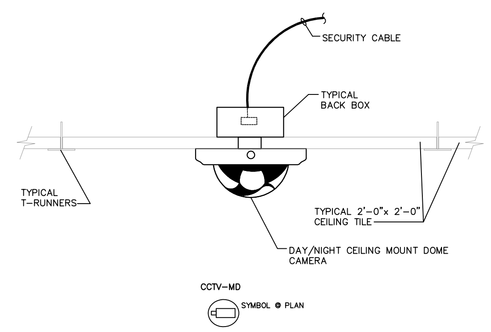

24 DV-9.04 SUPER WIDE DYNAMIC RANGE CAMERA MOUNTED TO TILE CEILING
NOT TO SCALE

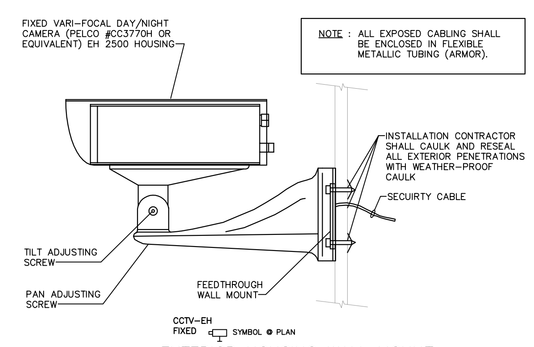

EXTERIOR HOUSING WALL MOUNT
24 DV-9.04 FIXED DAY/NIGHT CAMERA
NOT TO SCALE

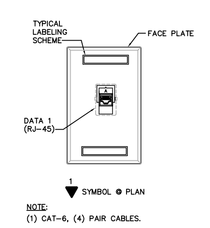

25 DV-9.04 1 POSITION DATA OUTLET
NOT TO SCALE

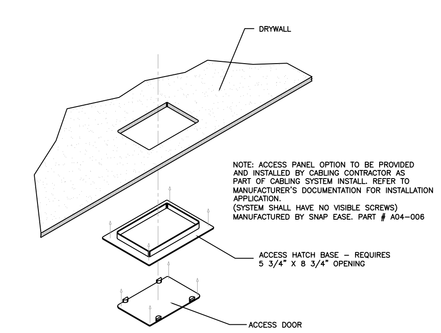

26 DV-9.04 ACCESS HATCH
NOT TO SCALE

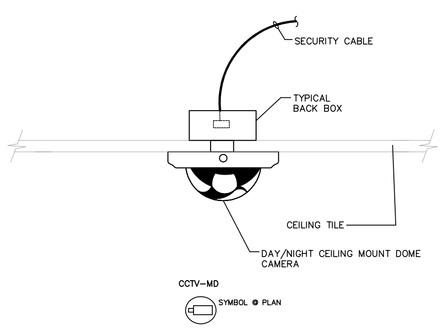

27 DV-9.04 SUPER WIDE DYNAMIC RANGE CAMERA MOUNTED TO HARD CEILING
NOT TO SCALE

nti network technologies, inc
www.nticonsultants.com
470 NORTH LILLA TON ST., STE. 205, LAWRENCEVILLE, GA. 30045
TEL (404) 376-0051 FAX (404) 376-0053

THIS DRAWING IS AN INSTRUMENT OF SERVICE AND, AS SUCH, IS THE PROPERTY OF NETWORK TECHNOLOGIES, INC. DATE, IT IS TO BE USED ONLY FOR THE PROJECT FOR WHICH IT WAS PREPARED AND IS NOT TO BE USED ON THIS DOCUMENT SHALL BE REPRODUCED OR TRANSMITTED IN ANY FORM OR BY ANY MEANS, ELECTRONIC OR MECHANICAL, WITHOUT THE PERMISSION IN WRITING OF NETWORK TECHNOLOGIES, INC.
NTI JOB NO. 08–1540

Rabun Rasche Rector Reece
ARCHITECTS
44 Broad Street NW, Suite 300
Atlanta, Georgia 30303
P 404-522-9455 F 404-522-9454

This drawing is the property of Rabun Rasche Rector Reece Architects and is not to be reproduced or copied in whole or in part. It is to be used for the Project and Site specified herein only and is not to be used on any other project. It is to be returned upon request. Scale as stated hereon are valid on the original drawing, the size of which is 30 inches high by 42 inches long.

DOUGLASVILLE CONFERENCE CENTER
DOUGLASVILLE, GEORGIA

REVIS.	DATE	REMARKS	REVIS.	DATE	REMARKS	REVIS.	DATE	REMARKS	REVIS.	DATE	REMARKS
	03/09/10	FIRE MARSHAL									
	05/14/10	PERMIT SET									
	07/16/10	BID SET									

SHEET TITLE
INSTALLATION DETAILS

PROJECT NUMBER 722
DATE 03/09/10
SHEET NUMBER DV-9-04

RELEASED FOR CONSTRUCTION

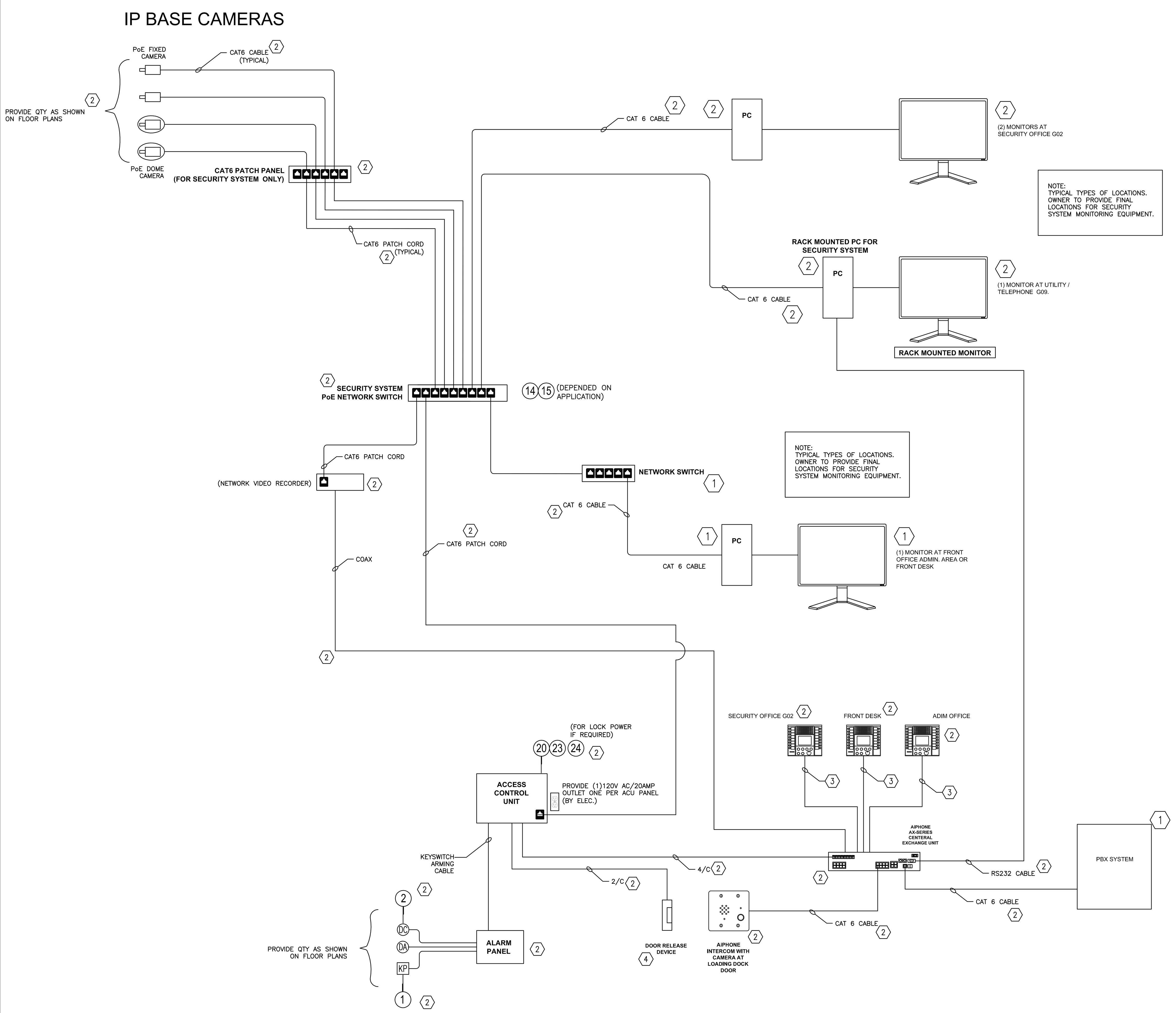

1 DV9.06 SECURITY DIAGRAM
NOT TO SCALE

NOTE:
THIS DRAWING IS INTENDED TO COMMUNICATE DESIGN INTENT. AS PART OF SUBMITTAL PROCESS, INSTALLER MUST SUBMIT COMPLETE SHOP DRAWING SET DEPICTING FINAL DESIGN OF COMPETE SYSTEM. ALL SCOPE REPRESENTED ON THIS SHEET TO BE WITHIN G.C. SCOPE OF WORK

CCTV AND ACCESS CONTROL COMPONET SCHEDULE

IDEM NO.	DESCRIPTION	MANUFACTURER	PART NUMBER
1	ALARM KEYPAD	ADEMCO	6139
2	DOOR CONTACT	SENTROL	1078C
3	DVR	DEDICATED MICROS	DS2
4	OUTDOOR CARD READER SURGE PROTECTION	DITEK	DTK-4LVLR-CR
5	AC SURGE PROTECTION 8-PORT POWER STRIP	DITEK	DTK-8FF
6	FAIL SECURE 24V DC ELEC. STRIKE	CAMDEN	CX-EL3808
7	1200LBS MAG LOCK	CAMDEN	CX-91S-12TDS
8	REX/MOTION SENSOR (MOUTED ABOVE DOOR)	OPTEX	OP-08C
9	LONG RANGE PROXIMITY CARD READER AT GATE CONTROL	HID	HID-5375
10	MODULAR CROSSOVER CARD CAGE FOR 19" RACK/CABNET	NITEK	CM52
11	4-CHANNEL CROSSOVER,12V DC POWER INSERTION AND VIDEO CARD	NITEK	CHM12A
12	VIDEO BALUN COMBINER FOR TWISTED PAIR	NITEK	VB43ATF
13	36 BIT PROX CARD	KEYSCAN	HID-C1325
14	PROSAFE 24-PORT 10/100 SMART SWITCH WITH 2-GIGABIT PORT AND 12 PoE PORT	NETGEAR	FS728TP
15	PROSAFE 24-PORT 10/100 SMART SWITCH WITH PoE PORT	NETGEAR	FS728TP
16	OVERHEAD DOOR CONTACT	AMSECO	AS-ODC59A or AS-ODC56A
17	ILLUMINATED EGRESS BUTTON (PUSH TO EXIT)	CAMDEN	CM-30E
18	KEYSCAN SYSTEM VII SOFTWARE	KEYSCAN	SYSTEMVII
19	CCTV SOFTWARE LICENSE	KEYSCAN	K-TV
20	8-DOOR READER PANEL	KEYSCAN	CA8000
21	ELEVATOR CAB CONTROL PANEL (1 CAB TO 40 FLOOR)	KEYSCAN	EC1000
22	ELEVATOR CAB CONTROL PANEL (2 CAB TO 16 FLOOR)	KEYSCAN	EC2000
23	NETWORK COMMUNICATION BOARD	KEYSCAN	NETCOM2
24	RS485 COMMUNICATION BOARD	KEYSCAN	CB-484
25	PROX CARD READER-2	KEYSCAN	K-PROX2
26	16V 40VA TRANSFOR FOR PANEL AND READER (2 PER-PANEL)	ALTRONIX	TB-1640
27	12V 7AH BATTERY BACKUP	ALTRONIX	BT-126

NOTE:
CONTRACTOR MAY PROVIDE ALTERNATE MANUFACTURERS PRODUCTS. COMPONENTS AND SYSTEM PROPOSED MUST POSSESS SAME FEATURES AND FUNCTIONALITY AS SPECIFIED PRODUCTS.
SOME OF THE ABOVE LISTED PRODUCTS MAY NOT BE REQUIRED FOR THIS PROJECT. CABLING CONTRACTOR IS RESPONSIBLE FOR PROVIDING AND INSTALLING ALL PRODUCTS, AS REQUIRED, TO FURNISH OWNER WITH COMPLETE SYSTEM.

INTRUSION DETECTION SYSTEM

1. INTRUSION DETECTION AND HOLDUP/DURESS ALARM PANELS AND KEYPADS SHALL BE LOCATED AS SHOWN ON THE FLOOR PLANS.
2. ALARM ANNUNCIATION SHALL OCCUR AT THE CENTRAL MONITORING STATION IN THE WORKROOM AND SHALL PROVIDE AUDIBLE AND VISUAL INDICATION OF ACTIVATION OF DOOR CONTACT ALARMS.
3. ALL CABLING TO AND FROM CONTACTS SHALL BE CONCEALED WITHIN WALLS AND ACCESSIBLE ACCESSIBLE CEILING SPACES. PLENUM RATED CABLE SHALL BE USED THROUGHOUT.
4. ALL FIRE RATED WALL AND FLOOR PENETRATIONS SHALL BE FIRE STOPPED PER LOCAL CODES AND ORDINANCES.
5. UPON RECEIPT OF A DOOR CONTACT VIOLATION THE SYSTEM SHALL:
   A) ACTIVATE AN AUDIBLE ALARM AT THE MAIN ALARM CONTROL PANEL, IN TELECOM ROOM G09.
   B) PROVIDE LOCATION INFORMATION ON LCD DISPLAYS.
   C) ENTER THE EVENT IN THE ALARM LOG WITH TIME AND DATE STAMP.
6. AN ALARM CONDITION SHALL BE ACKNOWLEDGED PRIOR TO CLEARING THE ALARM. THIS SHALL BE ACCOMPLISHED AT EACH KEYPAD LOCATION.
7. THE AUDIBLE ALARM AT THE MAIN CONTROL PANEL SHALL BE CAPABLE OF SILENCING PRIOR TO ACKNOWLEDGMENT.
8. THE INTRUSION DETECTION SYSTEM SHALL HAVE FOLLOWING CAPABILITIES:

   GENERAL FUNCTIONS
   - OPERATOR SECURITY LEVELS TO RESTRICT ACCESS TO CERTAIN INFORMATION AND CONTROL FUNCTIONS.
   - REMOTE/OFFSITE MONITORING CAPABILITY.
   - MANUAL OVERRIDE OF CONTACTS.
   - DOOR CONTACT TIME-OF-DAY SCHEDULE FOR ACTIVATION/ DEACTIVATION.

   ALARMS
   - ALARM LOG WITH SUMMARY REPORTS. INCLUDES FILTERING AND SORTING OPTIONS.
   - AUDIBLE TONES AT WORKSTATION IN THE EVENT OF AN ALARM.
   - USER-DEFINED ALARMS AND ALARM PRIORITIES.
   - DOOR OPEN FOR DEFINED PERIOD OF TIME (ADJUSTABLE) – ALL OR SELECTED SET OF DOORS CONTACT.

   REPORTS
   - AUTOMATIC REPORT GENERATION FOR PRINTING AND DISPLAYING ON MONITOR.
   - ALARM EVENT – SEARCH AND QUERY THE ALARM LOG.
   - ALARM DURATION – INDICATES LENGTH OF TIME A GIVEN EVENT HAS BEEN IN ALARM.
9. THE HOLDUP ALARM SYSTEM SHALL CONSIST OF ALARM SWITCHES CONNECTED TO AUDIBLE AND VISUAL ANNUNCIATORS/KEYPADS IN:

   - BEHIND FRONT DESK

   SYSTEM SHOULD AUTOMATICALLY NOTIFY POLICE OR 24 HR SECURITY MONITORING 3RD PARTY COMPANY UPON TRIGGERING OF HOLDUP ALARMS.
10. TRAINING: PROVIDE INSTRUCTORS EXPERIENCED IN OPERATION AND MAINTENANCE PROCEDURES. PROVIDE INSTRUCTION AT MUTUALLY AGREED-ON TIMES. FOR EQUIPMENT THAT REQUIRES SEASONAL OPERATION, PROVIDE SIMILAR INSTRUCTION AT THE START OF EACH SEASON. SCHEDULE TRAINING WITH OWNER, THROUGH GENERAL CONTRACTOR WITH AT LEAST SEVEN DAYS ADVANCED NOTICE. PROVIDE NOTIFICATION OF DATES, TIMES, LENGTH OF INSTRUCTION, AND COURSE CONTENT. CONTENT SHALL INCLUDE SYSTEM DESIGN AND OPERATIONAL PHILOSOPHY, REVIEW OF SYSTEM DOCUMENTATION, OPERATIONS, ADJUSTMENTS, TROUBLESHOOTING, MAINTENANCE, AND REPAIR.
11. INTRUSION DETECTION SYSTEM CONTRACTOR IS RESPONSIBLE FOR ALL NECESSARY CONNECTORS, CABLING, HARDWARE MODULES, ACCESSORIES, SOFTWARE, INITIAL PROGRAMMING, AND TRAINING REQUIRED FOR A COMPLETE AND OPERATIONAL INTRUSION DETECTION SYSTEM.

KEY NOTES:

1. OWNER PROVIDED AND INSTALLED. (TYPICAL)
2. PROVIDED AND INSTALLED BY G.C's SECURITY VENDOR. (TYPICAL)
3. PROVIDED ONE CAT6 CABLE HOMERUN FROM AIPHONE BASE UNIT TO AIPHONE CENTERAL EXCHANGE UNIT IN ROOM G09. INSTALLED BY CABLING CONTRACTOR. (TYPICAL)
4. SEE DOOR HARDWARE SCHEDULE FOR DEVICE TYPE. THIS DEVICE TO BE PROVIDED INSTALLED BY G.C. AS PART OF DOOR INSTALLATION

KEY SCAN INSTALLATION NOTES

READER TO ACU
- READER – 22 AWG 3 PAIR SHIELDED: MAXIMUM 500 FEET (152 M)
- DOOR LOCK – 18 AWG 1 PAIR: MAXIMUM 500 FEET (152 M) *
- DOOR CONTACT – 22 AWG 1 PAIR: MAXIMUM 1000 FEET (304.8 M) *
- REQUEST TO EXIT (RTE) – 22 AWG 3 PAIR: MAXIMUM 1000 FEET (304.8) *
  OPTIONAL COMMUNICATION EXTENDERS
  *WIEX EXTENDS DISTANCE BY 4000' ON TWISTED PAIR
  *CWIEX EXTENDS DISTANCE BY 500' ON COAX CABLE

ACU TO ACU

OPTION A - CB485
PARALLEL –22AWG / 4 CONDUCTOR (CAT6) @ 56K BAUD: MAXIMUM 2000 FEET (609M) BETWEEN ACUS

OPTION B - CPB-10
PARALLEL OR STAR – 22 AWG / 4 CONDUCTOR SHIELDED @19,200 BAUD: MAXIMUM 2000 FEET (609 M)

ACU TO PC OPTIONS
1. SERIAL RS–232 – 22 AWG / 5 CONDUCTOR SHIELDED: MAXIMUM 100 FEET (30.5 M)
2. COMMEX, RS–485, – 22 AWG 2 PAIR TWISTED CAT5: MAXIMUM 4000 FEET (1219.2 M)
3. LAN/WAN (TCP/IP) NETCOM 2 OR NETCOM 6 (ENCRYPTED)
4. DIAL–UP MODEM
5. USB–SER – RS232/RS485 TO USB ADAPTOR

OPERATING SYSTEM
MICROSOFT VISTA™ BUSINESS, WINDOWS 2000™, WINDOWS 2000 SERVER™, XP PROFESSIONAL™, WINDOWS 2003 SERVER™

CONTROL UNIT TECHNICAL SPECIFICATIONS

OPERATING VOLTAGES
INPUT TRANSFORMERS: 16 VAC, 37–40 VA CLASS II
INTERNAL POWER SUPPLY: 13.5 VDC @ 1.2 AMPS
BATTERY BACKUP: 12VDC 7 AMP/HR.

OPERATING ENVIRONMENT
32° TO 120° F. 0° TO 49° C., HUMIDITY: 0% TO 90% R.H., NON–CONDENSING

RELAY OUTPUTS
FORM C CONTACTS, 10 AMPS MAX. 24 VAC OR 32 VDC

COMMUNICATIONS
RS485 WITH CB–485
DIAL–UP WITH CB–485M
TCP/IP WITH NETCOM2 OR CB485 WITH NETCOM2P
EIA/TIA 562 WITH CPB–10

READER TECHNOLOGIES
- PROXIMITY
- CONTACTLESS SMART CARD
- ICLASS
- RADIO FREQUENCY (WIRELESS PARKING APPLICATIONS)
- BIOMETRICS
- BAR CODE
- MAG STRIPE

ENCLOSURE
SINGLE LOCKING BOX CEMA / NEMA TYPE 1
DIMENSIONS: 20 1/4" (51.4CM) H X 16 3/8" (41.6CM) W X 5 5/8" (14.3CM) D
NET WEIGHT: 15.8 LBS (7.2KG)

RECORDING DISK SIZE
(BASED ON 24 HOURS PER DAY, 6 PPS PER ALL CAMERAS, NO AUDIO)

PICTURE LEVEL	7 DAYS	31 DAYS	62 DAYS	93 DAYS
LOW (14K)	53 GB	231 GB	463 GB	678 GB
MEDIUM (18K)	68 GB	297 GB	595 GB	872 GB
HIGH (25K)	94 GB	412 GB	825 GB	1210 GB

PROGRAMING INTENT NOTES:

LOADING DOCK DOOR – VISITOR PRESS INTERCOM BUTTON. THE AIPHONE SYSTEM WILL BE ACTIVEDED AND STAFF WILL BE ABLE TO VIEW VISITORS ON BASE STATION, AND THEN RELEASE DOOR FOR ACCESS FROM BASE STATION. IF STAFF DOES NOT RESPOND THE AIPHONE WILL ROLL OVER TO THE PBX SYSTEM

STAFF ENTRANCE AT LOADING DOCK – STAFF WILL SWIPE ACCESS CARD THEN THE DOOR WILL RELEASE

DAYTIME OPERATION – FRONT DOOR AND DECK DOOR WILL BE UNLOCKED. DOOR CONTACTS TO REMAIN ACTIVEDED. AS VISITOR(S) ENTERS THE BUILDING AND ACTIVATE THE DOOR CONTACT, THEN THE KEYSCAN SYSTEM WILL PULL UP CCTV CAMERAS IN THAT ZONE.

FRONT DESK DOOR BELL – THE WIRELESS DOOR BELL SHALL BE MOUNTED ON A DISPLAY THAT CAN BE REMOVED WHEN AN ATTENDANT IS AVIALABLE. WHEN BELL IS PRESSED, THE DOOR BELL WILL CHIME IN BACK OFFICE.

WHEN STAFF ENTER BUILD FRIST TIME IN MORNING THE STAFF MEMBER HAS TO DEACTOVATE THE ALARM SYSTEM USING THE KEY PAD EITHER BY THE LOADING DOCK OR BY THE DECK DOOR. THIS WILL ALSO DEACTIVATE ALL MOTION DECTORS. WHEN LAST STAFF MEMBER EXITS THE BUILDING THE REVERSE PROCESS NEED TO BE DONE.

MINIMUM REQUIRMENT FOR IP CAMERAS

CAMERA TYPE	ILLUMINATION	DAY/NIGHT	POWER REQUIRMENT	MANUFACTURER	PART NUMBER
MINI DOME	BMW: COLOR .2LUX	YES	POE	AXIS	P3343
VANDAL RESISTANT MINI DOME	COLOR: 1LUX F1.4	YES	POE	AXIS	225FD

NOTE:
CONTRACTOR MAY PROVIDE ALTERNATE MANUFACTURERS PRODUCTS. COMPONENTS AND SYSTEM PROPOSED MUST POSSESS SAME FEATURES AND FUNCTIONALITY AS SPECIFIED PRODUCTS.
SOME OF THE ABOVE LISTED PRODUCTS MAY NOT BE REQUIRED FOR THIS PROJECT. CABLING CONTRACTOR IS RESPONSIBLE FOR PROVIDING AND INSTALLING ALL PRODUCTS, AS REQUIRED, TO FURNISH OWNER WITH COMPLETE SYSTEM.

AIPHONE AX SERIES

DESCRIPTION	PART NUMBER
COLOR VIDEO MASTER STATION	AX–8MV
CENTRAL EXCHANGE UNIT FOR 8 DOOR AND 4 MASTER	AX–084C
VANDAL RESISTANT CCTV CAMERA AUDIO DOOR STATION	IE–SSV
CCTV CAMERA INPUT MODULE	AXW–AZ

GENERAL NOTES:

1.) THIS SHEET IS FOR REFERENCE ONLY. INSTALLER IS RESPONSIBLE FOR VERIFYING AND PROVIDING APPROPRIATE NUMBER OF PANELS, CABLE, MOUNTING HARDWARE, SOFTWARE ETC... AND ANY OTHER RELATED COMPONENTS TO DELIVER A COMPLETE SYSTEM TO THE CLIENT.

2.) POWER OUTLET(S) ON DRAWING ARE FOR REFERENCE ONLY. SYSTEM SHALL BE DESIGNED BY ELECTRICAL ENGINEER AND SPECIFIED ON ELECTRICAL DRAWING. IF ADDITIONAL POWER IS REQUIRED, COORDINATE WITH ELECTRICAL ENGINEER FOR QTY, TYPE AND LOCATION. ALL POWER OUTLETS AT SECURITY HEAD END LOCATION TO BE ON EMERGENCY POWER SYSTEM. IF AVAILABLE.

3.) ALL PATCH CORDS SHALL BE MANUFACTURER TERMINATED AND MEET OR EXCEEDS TIA/EIA–568–B.2–1 CATEGORY 6 AND ISO 11801 CLASS E STANDARDS

4.) ALL CARD READERS SHALL HAVE THE CAPABILITY OF BEING UNLOCKED SIMULTANEOUSLY WITHOUT UNLATCHING UPON A SIGNAL FROM THE FIRE PANEL.

5.) SECURITY CONTRACTOR TO PROVIDE SIGNS ON ROOF TOP THAT STATES THAT THIS AREA IS UNDER SURVEILLANCE.

6.) BACK DOOR BY LOADING DOCK SHALL HAVE A DOOR RELEASE. THE DOOR CAN BE ACTIVATED BY AIPHONE SYSTEM AND KEYSCAN SOFTWARE.

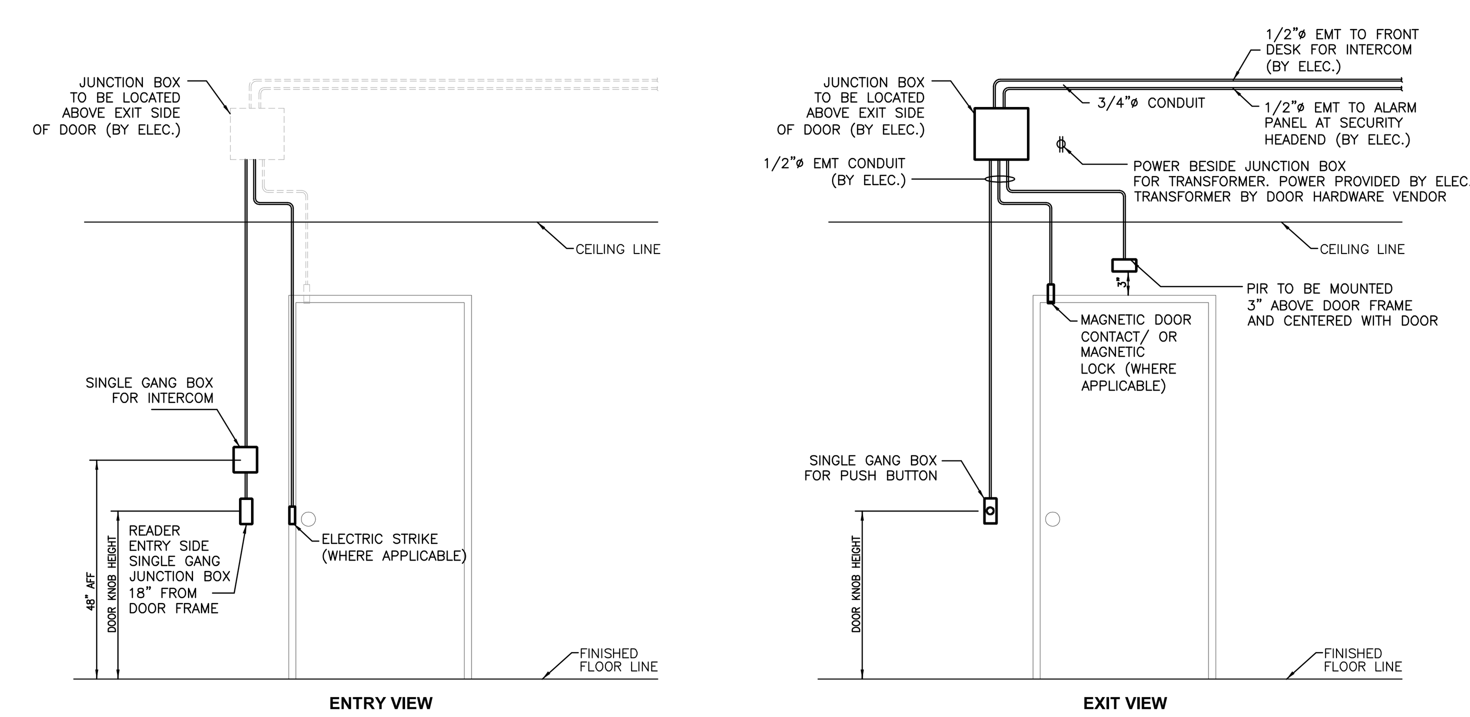

2 DV9.06 SINGLE DOOR CONDUIT ELEVATION (TYPICAL)
NOT TO SCALE

G.C.'s SECURITY CONTRACTOR TO PROVIDE	G.C.'s DOOR HARDWARE VENDOR TO PROVIDE	G.C.'s ELECTRICAL CONTRACTOR TO PROVIDE
– SECURITY SYSTEM – CARD READERS – CABLES – MISC. (PANELS,CABLE, MOUNTING HARDWARE, SOFTWARE ETC... AND ANY OTHER RELAYED COMPONENT TO DELIVER A COMPLETE SYSTEM TO THE CLIENT)	– EXIT BUTTON – PIR – DOOR CONTACTS – ELECTRIC STRIKES – MAGNETIC LOCKS – ELECTRIC LOCKS – TRANSFORMER	– CONDUIT – POWER PANELS – POWER FOR DOOR HARDWARE (120V,15AMP)

NOTE :

THIS DRAWING IS INTENDED TO COMMUNICATE DESIGN INTENT. AS PART OF SUBMITTAL PROCESS, INSTALLER MUST SUBMIT COMPLETE SHOP DRAWING SET DEPICTING FINAL DESIGN OF COMPLETE SYSTEM.

IF DOOR HARDWARE VENDOR IS NOT SUPPLYING IDEMS LISTED ABOVE, IT IS THE RESPONSIBILITY OF THE SECURITY VENDOR TO SUPPLY AND INSTALL ALL OF THE COMPONENTS TO DELIVER A COMPLETE SYSTEM TO THE CLIENT.

ULTIMATELY THE GENERAL CONTRACTOR IS RESPONSIBLE TO ASSURE PROPER COORDINATION BETWEEN DISCIPLINES OCCURS TO DELIVER COMPLETE SYSTEM.

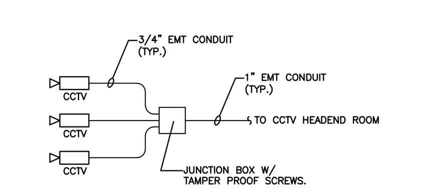

2 DV9.06 HORIZONTAL CCTV CONDUIT SCHEMATIC DIAGRAM
NOT TO SCALE

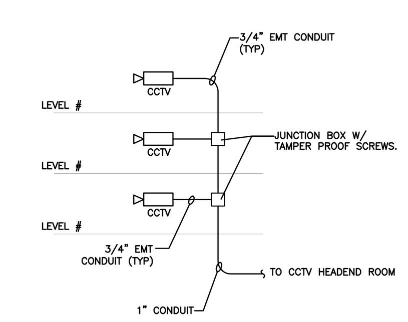

3 DV9.06 MULTILEVEL CCTV CONDUIT SCHEMATIC DIAGRAM
NOT TO SCALE

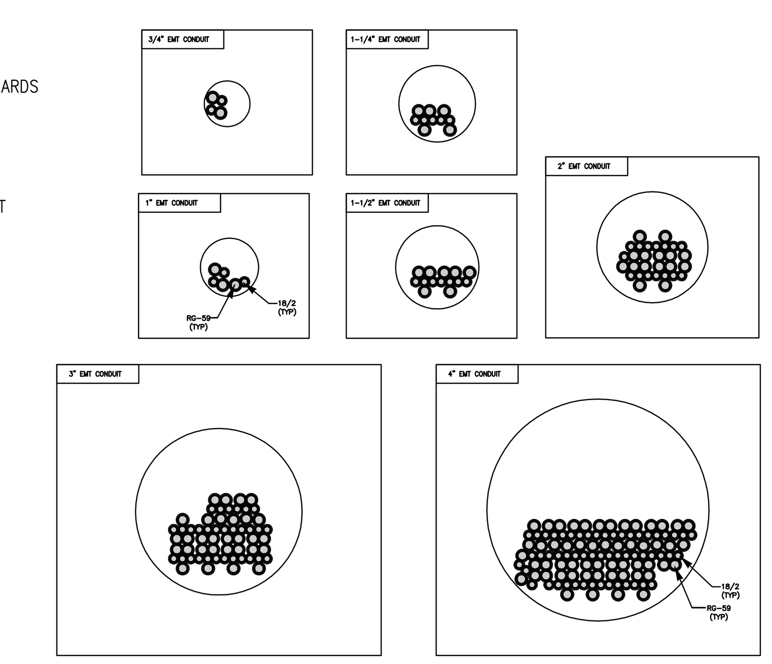

5 DV9.06 EMT CONDUIT FILL RATIOS
NOT TO SCALE

nti network technologies, inc
www.nticonsultants.com

Rabun Rasche Rector Reece ARCHITECTS
44 Broad Street NW, Suite 300
Atlanta, Georgia 30303
P 404-522-9455 F 404-522-9454

This drawing is the property of Rabun Rasche Rector Reece Architects and is not to be reproduced or copied in whole or in part. It is to be used for the Project and Site specifically identified herein and is not to be used on any other project. It is to be returned upon request. Scale as stated hereon are valid on the original drawing, the size of which is 30 inches high by 42 inches long.

DOUGLASVILLE CONFERENCE CENTER
DOUGLASVILLE, GEORGIA

REVIS.	DATE	REMARKS
	03/09/10	FIRE MARSHAL
	05/14/10	PERMIT SET
	07/16/10	BID SET

SHEET TITLE: SECURITY DIAGRAM
PROJECT NUMBER: 722
DATE: 03/09/10
SHEET NUMBER: DV-9-06

RELEASED FOR CONSTRUCTION